OPERATOR'S MANUAL

STACK-IT

V 3.0

PLEASE NOTE:

- ► **Read this manual BEFORE operating the machine.**
- ► **Keep this manual for your reference.**
- ►**Go to www.LAIGames.com click on Operator Access to register your games and receive of future updates.**

ISO 9001 CERTIFIED ORGANIZATION

URS UKAS QUALITY MANAGEMENT 043-A

ISO 9001: 2008 Cert No.17460

© LAI GAMES

LAI GAMES

Correspondence regarding this machine should be addressed to your closest *LAI GAMES* office, or *LAI GAMES* Distributor.
For contact details, refer to the back page of this manual.

© *LAI GAMES*

Copyright Notice:

Authorization is hereby provided to you to copy this manual in its entirety provided such copies are used for non-commercial purposes and solely for use with *LAI GAMES* products. This authorization is specifically conditioned to include all legends, copyright, proprietary and other notices which appear herein are unaltered on any and all copies you make.

LAI GAMES

sales@laigames.com www.laigames.com

LAI GAMES NOTES

Dear Customer,

Keep up-to-date with any new Software release or Service Bulletins for this Game.

Check our Website at www.laigames.com and click on Product Support, here you will find links to all the Bulletins and Software Updates to keep your game in top working order.

Thanks,

TABLE OF CONTENTS

SAFETY PRECAUTIONS **1**
MACHINE INSTALLATION AND INSPECTION **2**
TOP HEADER ASSEMBLY **3**
HEIGHT EXTENSION INSTALLATION **4**
INTRODUCTION **5**
DIMENSIONS **7**
HOW TO PLAY **8**
OPERATION **9**
OPERATIONAL DIAGRAM 9
ATTRACT MODE 9
PLAY MODE 9
TEST MODE **10**
TEST MODE DIAGRAM 10
GAME SWITCHES TEST **10**
RUN TEST MODE **10**
SOUND, LAMPS & DISPLAY TEST 11
SWITCH TEST 11
PROGRAMMABLE ADJUSTMENTS MODE **12**
PROGRAMMABLE ADJUSTMENTS MODE DIAGRAM 12
PROGRAMMABLE ADJUSTMENTS PROCEDURE 12
PROGRAMMABLE ADJUSTMENTS QUICK REFERENCE TABLE (V3.0) 13
DESCRIPTION 13
RANGE 13
DEFAULT 13
SOME COMMON TICKET PAYOUT SETTINGS 18
AUDITS MODE **20**
AUDITS MODE DIAGRAM 20
AUDIT PROCEDURE 21
AUDITS QUICK REFERENCE TABLE 22
AUDITS DETAILED 23
GAME HISTORY MODE **25**
GAME HISTORY MODE DIAGRAM 25
GAME HISTORY QUICK REFERENCE TABLE 25
GAME HISTORY PROCEDURE 26
ERRORS AND TROUBLESHOOTING **27**
ERROR CODE QUICK REFERENCE TABLE 27
TROUBLESHOOTING GAME ERRORS 28

SECTION A: SERVICE INSTRUCTIONS **29**
LOCATING AND ACCESSING PARTS **30**
PARTS DESCRIPTION 32
LAMPS **34**
MAINTENANCE **35**
SECTION B: TECHNICAL DETAILS **36**
MAINS VOLTAGE ADJUSTMENT **37**
TICKET DISPENSER REFERENCE GUIDE **38**
STACK IT MAIN WIRING **43**
STACK IT TICKET DISPLAY WIRING **44**
STACK IT COIN WIRING **45**
STACK IT POWER WIRING **46**

SAFETY PRECAUTIONS

The following safety precautions and advisories are used throughout this manual and are defined as follows.

*** WARNING! ***
*Disregarding this text could result in **serious injury**.*

*** CAUTION! ***
Disregarding this text could result in damage to the machine.

*** NOTE! ***
■ An advisory text to hint or help understanding.

BE SURE TO READ THE FOLLOWING

*** WARNING! ***

Always *turn **OFF** Mains AC power and unplug the game, before opening or replacing any parts.*

Always *when unplugging the game from an electrical outlet, grasp the plug, not the line cord.*

Always *connect the Game Cabinet to grounded electrical outlet with a securely connected ground line.*

Do Not *install the Game Cabinet outdoors or in areas of high humidity, direct water contact, dust, high heat or extreme cold.*

Do Not *install the Game Cabinet in areas that would present an obstacle in case of an emergency, i.e. near fire equipment or emergency exits.*

*** CAUTION! ***

Always *use a Digital Multimeter, logic tester or oscilloscope for testing integrated circuit (IC) logic PC boards. The use of a continuity tester is not permitted.*

Do Not *Connect or disconnect any of the integrated circuit (IC) logic PC boards while the power is **ON**.*

Do Not *use any fuse that does not meet the specified rating.*

Do Not *Subject the game cabinet to extreme temperature variations. Reliability of electrical components deteriorates rapidly over 60 ^{o}C.*

MACHINE INSTALLATION and INSPECTION

When installing and inspecting ***"Stack It"***, be very careful of the following points and pay attention to ensure that the players can enjoy the game safely.

- Be sure to turn the power **OFF** before working on the machine.

*** WARNING! ***

Always *Turn* ***OFF*** *mains power before removing safety covers and refit all safety covers when work is completed.*

- Make sure the power cord is not exposed on the surface (floor, ground, etc.) where people walk through.
- Check that the rubber glide feet levelers are set evenly on the floor so that the game cabinet is unable to roll and is stable.
- Always make complete connections for the integrated circuit (IC) logic PC Boards and other connectors. Insufficient insertion can damage the electrical components.

*** CAUTION! ***

Before *switching the machine on be sure to check that it has been set on the correct voltage for your area!*

Refer *to the mains voltage adjustment section of this manual on.*
Machines are normally shipped on 220V AC unless otherwise specified.

- Only qualified personnel should inspect or test the integrated circuit (IC) logic PC Boards.
- If any integrated circuit (IC) logic PC Boards should need servicing. Please contact the nearest *LAI GAMES* distributor. (Refer to the back page of this manual)

TOP HEADER ASSEMBLY

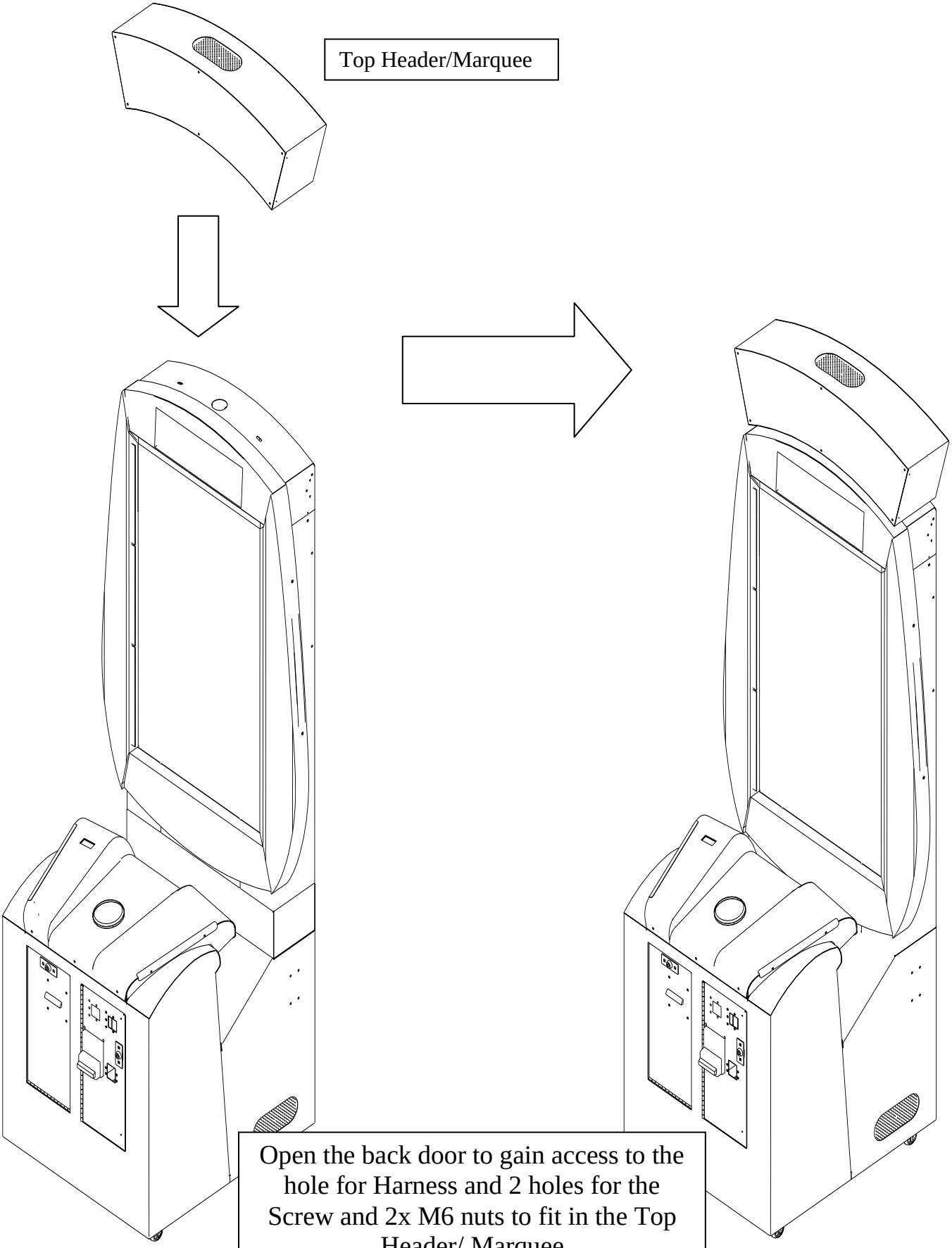

Open the back door to gain access to the hole for Harness and 2 holes for the Screw and 2x M6 nuts to fit in the Top Header/ Marquee

HEIGHT EXTENSION INSTALLATION

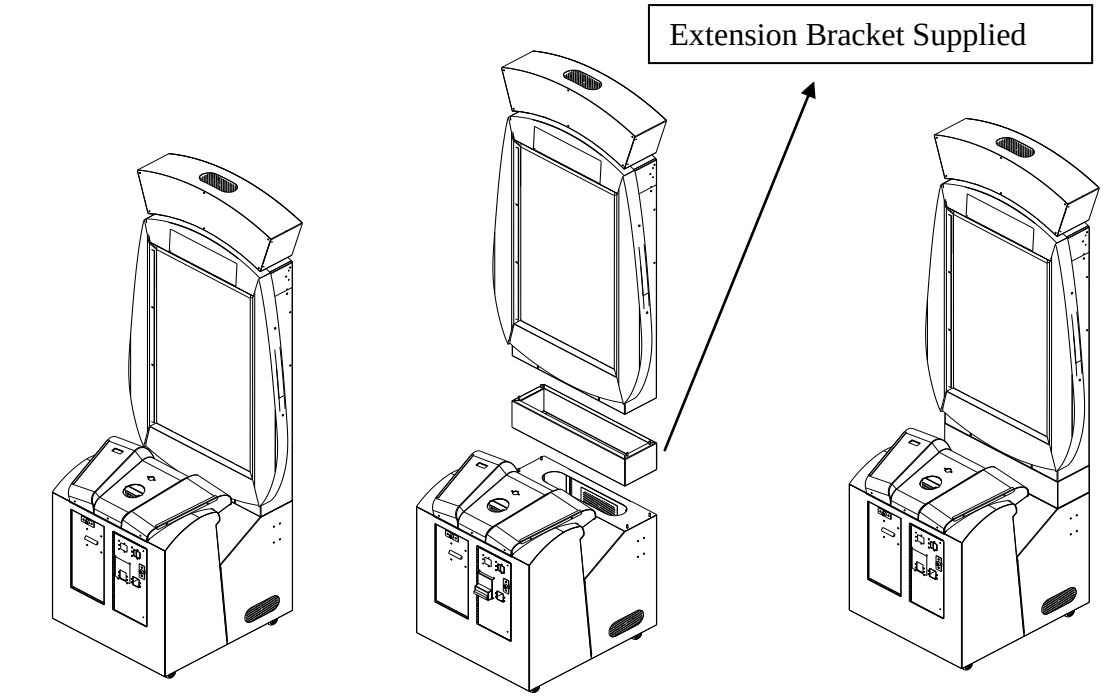

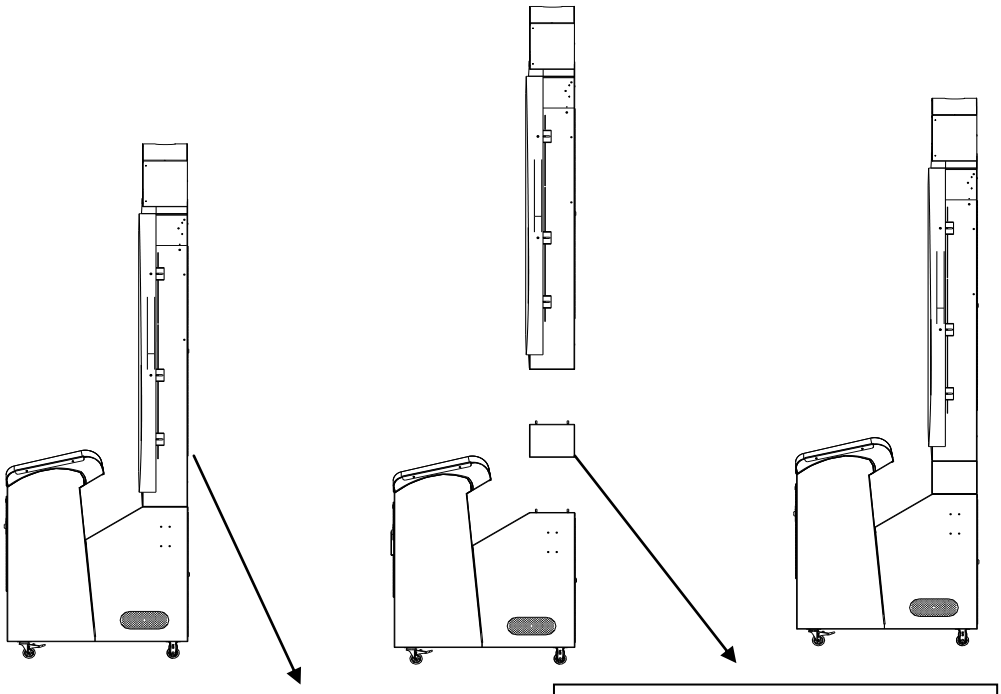

Open the back door and unscrew 4 M6 nuts on the bottom of the display

Step 1

Insert the bracket on top of the bottom cabinet

Step 2

INTRODUCTION

CONGRATULATIONS! You have just bought the ***"Stack It"***, another great product from *LAI GAMES*. This is a ticket redemption game with a quick stop skill that is simple and fast to learn and play. With choices of safe levels for the player and ability for the operator to preset minimum ticket values for each level, we feel that ***Stack It*** will make a great addition at any location, on or off site. The bright red and blue playfield makes it an attractive, intuitive but exciting game with challenges at every level.

We hope you take the time to read this manual and learn about various features and user-friendly adjustments that can be made to "fine-tune" the game for maximum earning potential.

DESCRIPTION

Stack It substantially changes the game play and also makes it very easy to operate and set for the operator. The game now plays and works just like the famous Stacker prize vending game where the object is initially to stack the blocks to the "Win Level" which is level 9 and previously the Double Up level. At this level the player must make a choice to either take the "Win Level" tickets they have won or risk these tickets to try and win the "Super Bonus". If the player loses prior to winning the "Super Bonus" or loses prior to reaching the "Win Level" they will only receive a number of mercy tickets based on the P-09 setting.

The Game settings are extremely easy and all automatic if left on default and therefore it is very simple to set up with the key to the game with only one important setting: **P-08** where you set the average number of tickets (ATG) that you want the game to pay out. From this one setting all the other game settings are automatically set. They can be "tweaked" and fine tuned slightly if required by the operator but basically based on the P-08 setting the game will control the ticket payout simply, seamlessly and most importantly accurately for the operator.
Please read through the settings below. The P01 through to P06 are just coin settings so the game settings are P07 thru to P15

PACKAGING

- At delivery, the machine should arrive in good condition. To move the packaged machine for transport or placement, use a forklift and take care not to hit the package or stack heavy objects on top, as this may cause damage to the machine.

CONTENTS

- The “Stack It” cabinet
- Keys: 2 x coin door keys
  2 x back door keys
  2 x ticket door key
- Operator’s manual
- IEC Power Cord (In cash box)
- Parts & Accessories (In cash box)

DIMENSIONS

- Weight: 128 kg (282.11lb)
- Height: 2300 mm (78-2”)
- Width: 770 mm (26-18”)
- Length: 800 mm (27-2”)
- Power: Maximum 220 W – (220V @ 1.0A)(120V @ 1.5A)

ELECTRIC SUPPLY

The game has the option to operate on a 110V, 120V, 220V or 240V AC 50/60Hz single phase mains electric supply.
The supply must be a three wire grounded supply.

*** CAUTION! ***

Before *switching the machine on be sure to check that it has been set on the correct voltage for your area!*

Please *Refer to the mains voltage adjustment section of this manual.*
Machines are normally shipped on 220V AC unless otherwise specified.

LOCATION REQUIREMENTS

- Ambient temperature: between 5°C and 40°C.
- Ambient humidity: Low
- Ambient U.V. radiation: Very low
- Vibrations level: Low

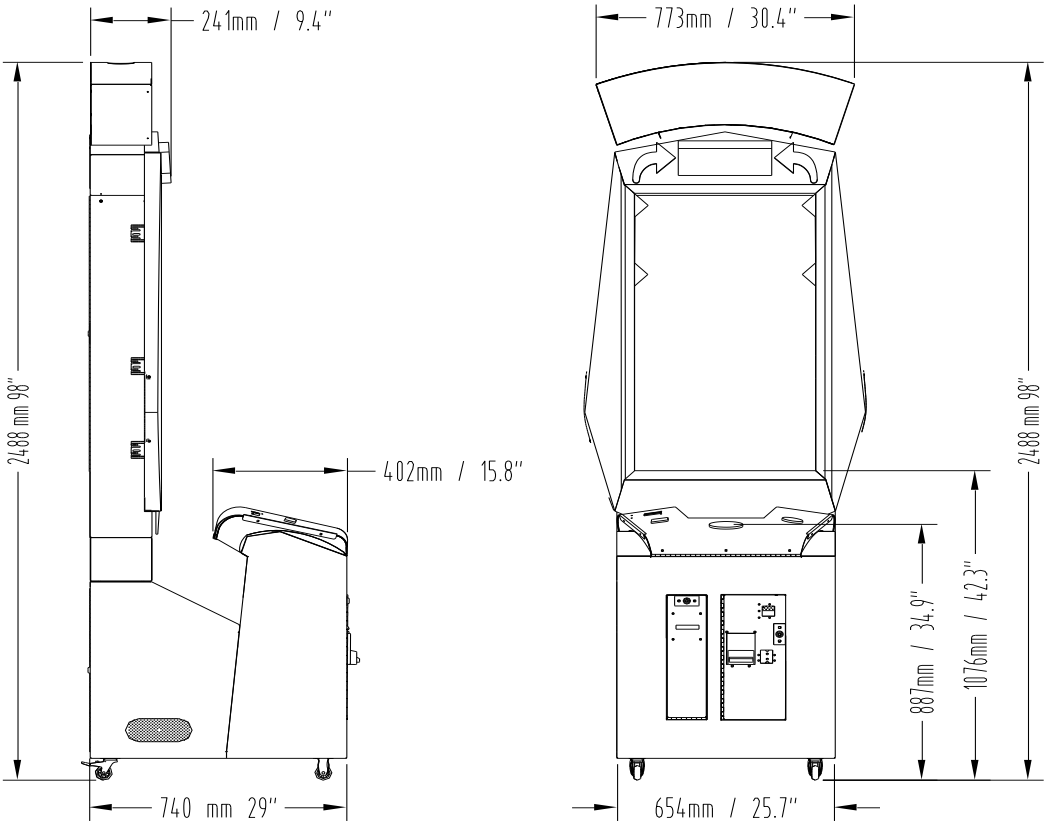

HOW TO PLAY

Players AIM to BUILD A VERTICAL STACK OF BLOCKS TO WIN TICKETS

- Insert coin/s.
-
- Press Start/Stop button to start a game;
- Press Start/Stop button to stop the moving blocks at desired position;
- Build the stack of blocks by stopping each level of blocks on top of each other;
- Players win a set number of tickets.
- Reaching the win level, players can select to get a ticket payout or press the Continue button and try for Super Bonus zone.
- Game ends any time the player fails to stop the moving blocks at the desired position, or they choose to get a ticket payout.

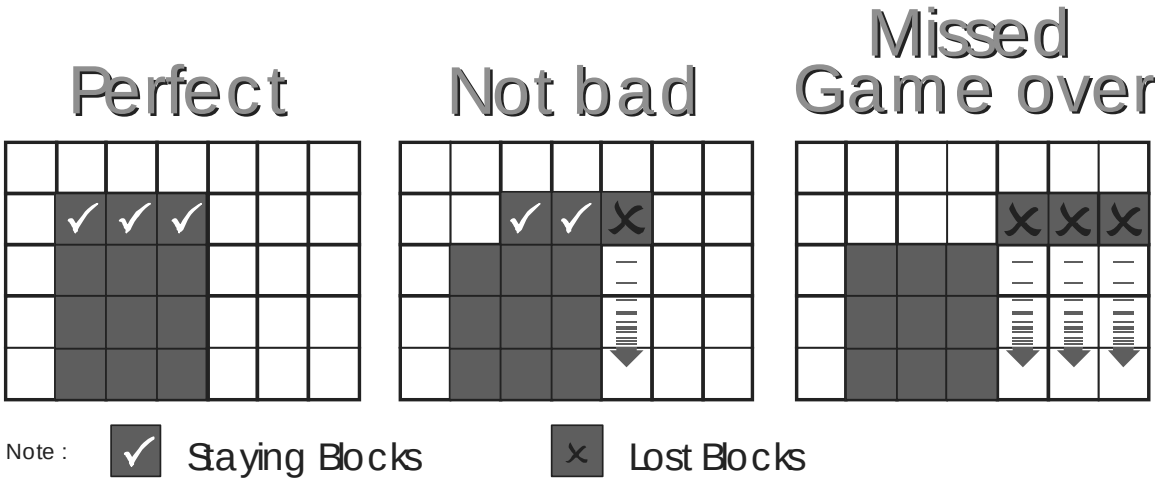

OPERATION

The ***"Stack It"*** game has six operational modes: Attract mode, Play mode, Test Mode, Programmable Adjustments Mode, Audits Mode and Game History Mode.

OPERATIONAL DIAGRAM

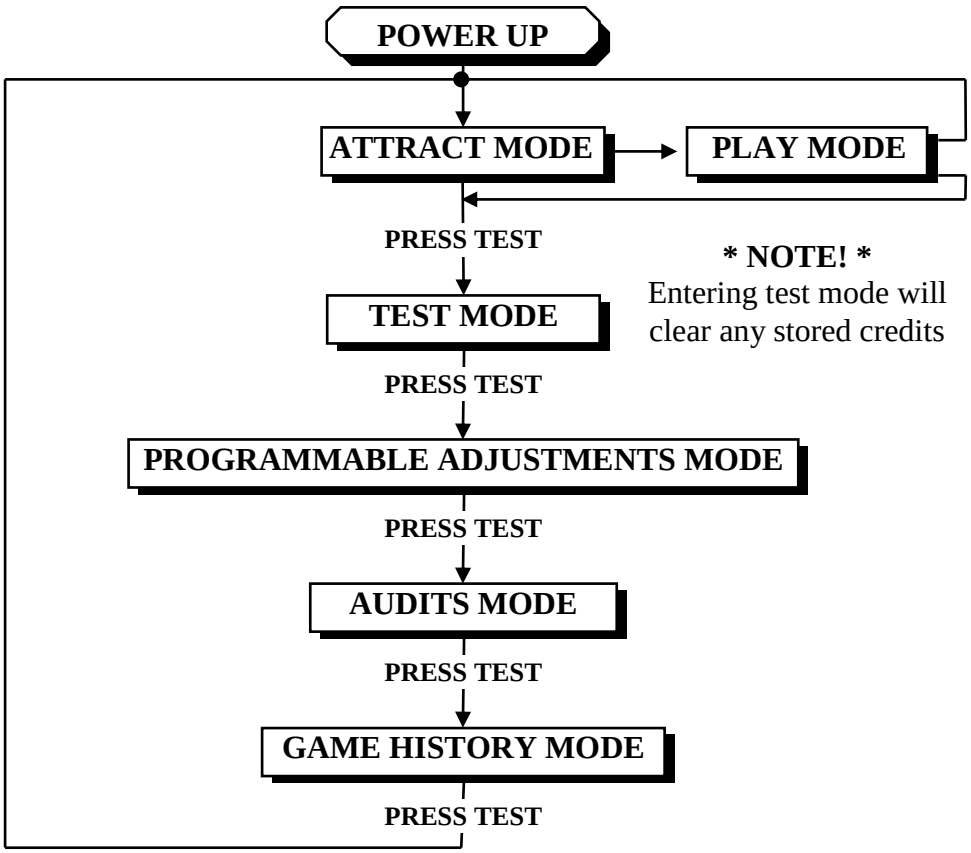

ATTRACT MODE

- The Attract mode provides a light and sound display, while the game is not being played. This feature is to attract potential customers to play the game. The attract mode sound can be turned on or off.

PLAY MODE

- The *Stack It* has two play modes. The Standard *Coin Play* mode, where a coin, or coins are inserted. Or *Free Play* where no coins are necessary.

COIN PLAY

- The *Coin Play* mode is entered from Attract mode, by inserting coins in any of the two coin slots in front of the machine / cabinet and then following the instructions in "How to Play" section of this manual.

FREE PLAY

- The free play mode is entered from attract mode by holding the Service button for longer than five second, FrEE will be displayed on the 4-digit LED display.
- For a single free game, just press the Service button once. When issuing single free games in this manner, Tickets can be won as normal.

TEST MODE

The **Stack It** Test mode has *Three Test Configurations* allowing you to test the function of Sound, Lamps, Displays, Game Switches, and Ticket Dispenser Motor. *(Refer to the Test Mode Diagram below).*

The Test mode is also used for Clearing Game Errors. If there is an active error, its code will be displayed. To clear the error code, press the red test button once. The error can be bypassed quickly by pressing the red test button twice.

*** NOTE! ***

- Entering Test Mode will CLEAR any CREDITS remaining in the game.
- If during test mode no ADJUSTMENTS or actions are made to the game for approximately four minutes, it will automatically RETURN to Attract Mode.

TEST MODE DIAGRAM

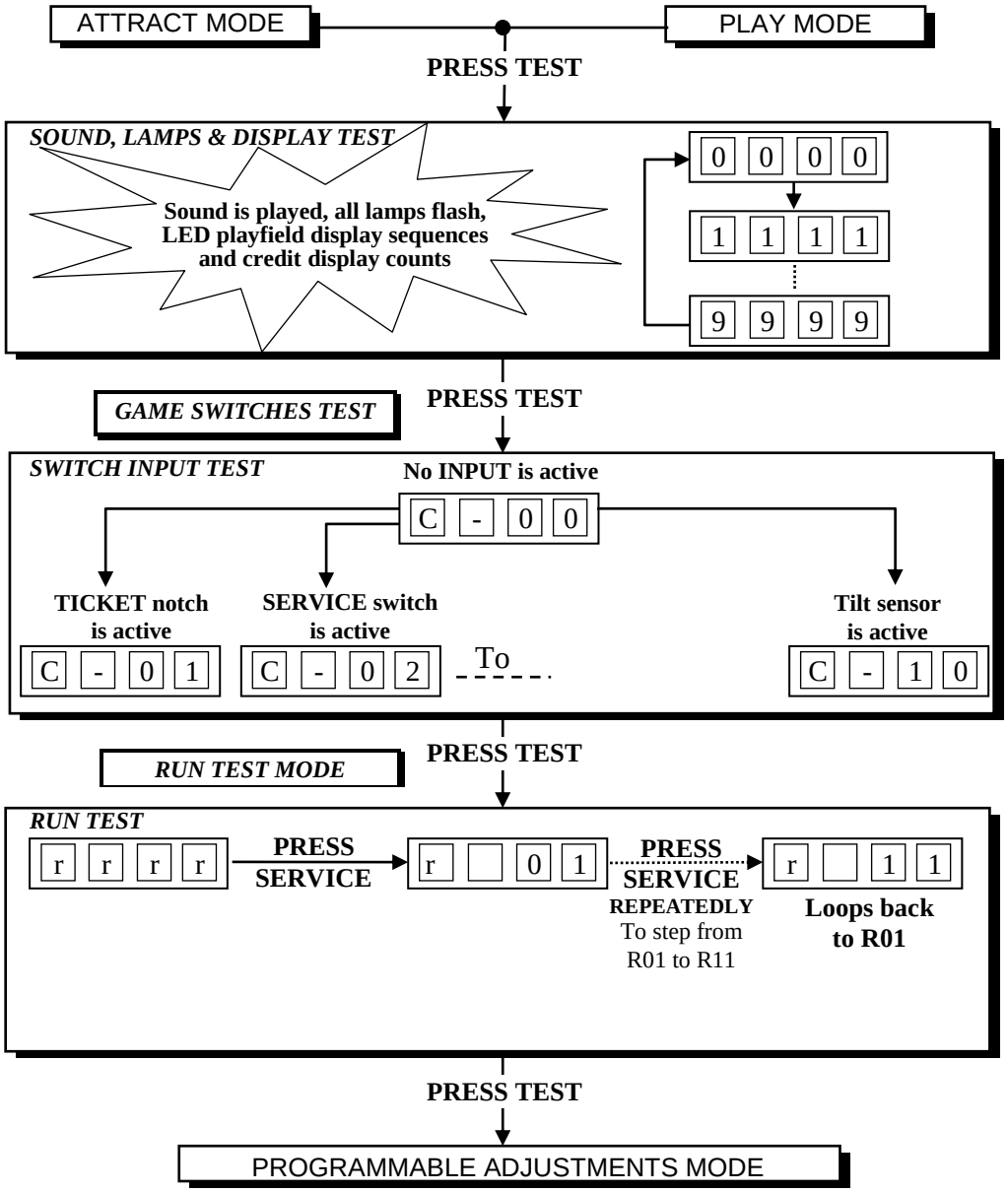

SOUND, LAMPS & DISPLAY TEST

- **ENTER** The Sound, Lamp & Display test is entered from Attract mode by pressing the test button once.

*** NOTE! ***

- If there is an active error displayed, press the red test button once to clear the error.
- If the error code will not clear, it can be bypassed quickly by pressing the red test button twice.

DURING THE TEST:

- Game music and a voice over will be played.
- The Credit display will count from 0000 to 9999 and then repeat.
- The LED Playfield Display panel will run a test pattern sequence.
- The Continue, Start/Stop and Select button lamps will flash on and off

- **EXIT** The Sound, Lamp & Display test is exited by pressing the test button. The next test will be the switch test.

SWITCH TEST

- **ENTER** The Switch Test can be entered by pressing the Test button once while in the Sound, Light & display test mode or by pressing the Test button twice while in Attract mode, C-XX will be displayed on the 4-digit display where 'XX' is a number representing the switch that is active.

- **TESTING THE GAME SWITCHES**
  All game switches have a code from C1 to C10 as tabled below. By activating any of the switches, their code will be displayed on the 4-digit display. If there are no switches are active then C-00 will be displayed.

CODE	DISPLAY	SWITCH FUNCTION	SWITCH LOCATION
C0	C-00	No Switch Active	-
C1	C-01	Ticket Notch Active	Ticket Dispenser
C2	C-02	Service Switch Active	Service Panel
C3	C-03	Start/Stop Button Active	Control Panel
C4	C-04	Coin 1 Switch Active	Coin Door
C5	C-05	Coin 2 Switch Active	Coin Door
C6	C-06	Payout Button Active	Control Panel

Normal condition for the game is C-00, no switches are active.

*** NOTE! ***

- Several switches can be simultaneously activated in the Switch test. The display will then consecutively show their codes, indicating which switches are active. However, it is much easier to test the game switches individually.

PROGRAMMABLE ADJUSTMENTS MODE

The Stack It has fifteen programmable adjustments that can be changed in this mode. They are P01 to P15 and their codes and values are displayed alternatively during the adjustment procedure.

Example: Code **P01** *(Number of Coins Mech 1)* is displayed as P□01 and its value of **1** as □□□1 on the 4-digit display.

PROGRAMMABLE ADJUSTMENTS MODE DIAGRAM

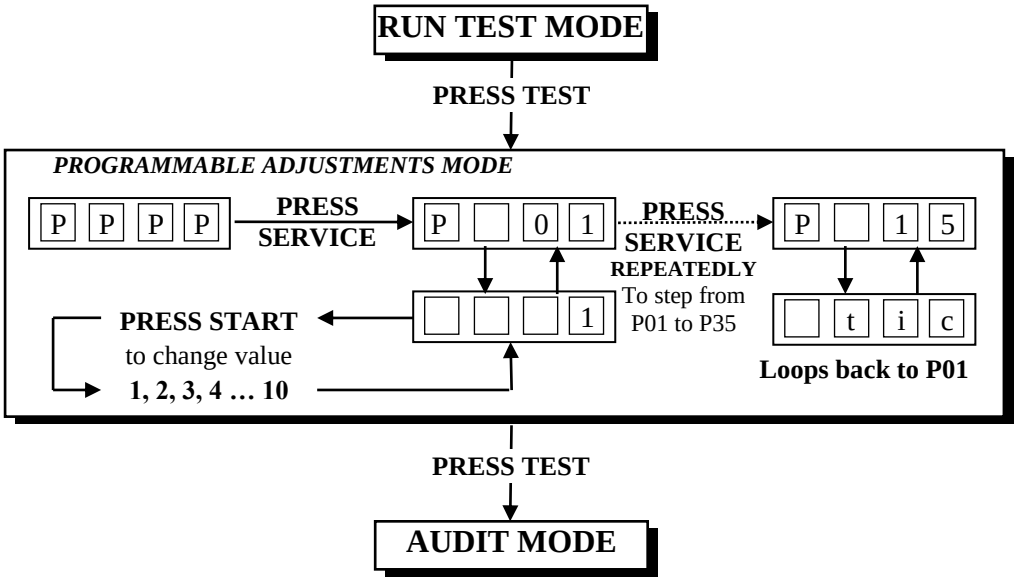

PROGRAMMABLE ADJUSTMENTS PROCEDURE

- **ENTER** The Programmable Adjustments Mode can be entered by pressing the Test button once while in the Run Test or by pressing the Test button four times while in Attract mode, PPPP will be displayed on the 4-digit credit display.

- **SELECT** The green Service button is pressed to step through each of the adjustment configurations, starting from the PPPP display, P01 being the first step, continuing through to P34, and then looping again from P01 to P until the mode is exited.

- **CHANGE** The Start/Stop button is pressed to change the displayed value. The value can only be stepped up by using the Start button, but the value will loop back to its minimum value as the next step after its max value.

*** NOTE! ***

- Certain program adjustments have a fast adjustment feature. By holding the Start/Stop button down, the values step through quicker.

- **EXIT** The Programmable Adjustments mode is exited into Audits mode, by pressing the Test button once.

PROGRAMMABLE ADJUSTMENTS QUICK REFERENCE TABLE (V3.0)

No	***Description***	***Range***	***Default***
P01	Coin Slot 1: Coins/Credit	1..10	1
P02	Coin Slot 1: Games/Credit	1..10	1
P03	Activate Multiple Bonus Pricing Coin Slot 1	On/Off	Off
P3-1	Coin Slot 1: Number Coins for Bonus Pricing level 1	Off…99	Off
P3-2	Coin Slot 1: Number of bonus credits on Pricing level 1	Off…99	Off
P3-3	Coin slot 1: Number Coins for Bonus Pricing level 2	Off…99	Off
P3-4	Coin Slot 1: Number of bonus credits on Pricing level 2	Off…99	Off
P3-5	Coin slot 1: Number Coins for Bonus Pricing level 3	Off…99	Off
P3-6	Coin Slot 1: Number of bonus credits on Pricing level 3	Off…99	Off
P04	Coin Slot 2: Coins/Credit	1..10	1
P05	Coin Slot 2: Games/Credit	1..10	1
P06	Activate Multiple Bonus Pricing Coin Slot 2	On/Off	Off
P6-1	Coin Slot 2: Number Coins for Bonus Pricing level 1	Off…99	Off
P6-2	Coin Slot 2: Number of bonus credits on Pricing level 1	Off…99	Off
P6-3	Coin slot 2: Number Coins for Bonus Pricing level 2	Off…99	Off
P6-4	Coin Slot 2: Number of bonus credits on Pricing level 2	Off…99	Off
P6-5	Coin slot 2: Number Coins for Bonus Pricing level 3	Off…99	Off
P6-6	Coin Slot 2: Number of bonus credits on Pricing level 3	Off…99	Off
P07	Attract Sound	On/Off	On
P08	Average Ticket per Game (ATG)	1..50	25
P09	Number of Mercy Tickets (maximum 40% of ATG)	0,1,2,3,…,8	1
P10	Game Difficulty 1=easy, 2= medium 3=Hard	1..3	2 (medium)
P11	Blocks Strobing During Attract Mode	On/Off	On
P12	Enable Ticket on Free Mode	On/Off	OFF
P13	Common Coin Input Enable	On/Off	OFF
P14	Auto/Manual Ticket payout for Super bonus	On/Off	On
P15	Fixed (Off) or incrementing(On) Super Bonus Tickets	On/Off	On

Note: Standard setting using .50¢/50p base price and 30 – 40 % Payout ratio.

■ P01 = COIN MECH 1: NUMBER OF COINS PER CREDIT

(Default 01) (Adjustable 1 – 10)

This sets the number of coins that need to be inserted into coin mechanism 1, for each credit. It can be set to either of 1, 2, 3… to 10 coins for one credit.

■ P02 = COIN MECH 1: NUMBER of GAME PLAYS PER CREDIT

(Default 01) (Adjustable 1 – 10)

This sets the number of games for each credit inserted into coin mechanism 1. It can be set to either of 1, 2, 3… to 10 plays for each credit, the *default* setting is "1".

■ P03 = COIN MECH 1: ACTIVATE MULTIPLE BONUS PRICING

(Default OFF) (Adjustable ON – OFF)

Note: Settings P 03 and P 03-1 to P03-6 are only used for the setting of bonus credit levels e.g. $0.50c/1 play, $1/3plays, $2/7plays, $5/20 plays

This turns on the multiple bonus credit system and activates the settings for up to 3 bonus levels on coin mechanism 1. It can be set to ON or OFF. The *default* setting is "OFF" this mean the multiple bonuses is disabled, if the setting changed to ON the multiple bonus setting will be open the next sub-menu **P03-1** and so on.

Table below shows some common bonus settings

Examples	**(Base price $0.25c)**	**(Base Price $0.50c**	**(Base Price $0.50c)**	**(Base Price $1.00)**
P Setting Adjustment	1 *play* **$ 0.25c** 3 *plays* **$ 0.50c** 7 *plays* **$ 1.00** ($0.25c coins or DBA set on $0.25c pulses)	1 *play* **$ 0.50c** 3 *plays* **$ 1.00** 7 *plays* **$ 2.00** ($0.25c coins or DBA set on $0.25c pulses)	1 *play* **$ 0.50c** 3 *plays* **$ 1.00** 8 *plays* **$ 2.00** 22 *plays* **$ 5.00** ($0.25c coins or DBA set on $0.25c pulses)	1 *play* **$ 1.00** 3 *plays* **$ 2.00** 8 *plays* **$ 5.00** 18 *plays* **$ 10.00** ($0.25c coins or DBA set on $0.25c pulses)
P01 / P04	1	2	2	4
P02 / P05	1	1	1	1
P03 / P06	ON	ON	ON	ON
P3-1 / P6-1	2	4	4	8
P3-2 / P6-2	1	1	1	1
P3-3 / P6-3	4	8	8	20
P3-4 / P6-4	3	3	4	3
P3-5 / P6-5	OFF	OFF	20	40
P3-6 / P6-6	OFF	OFF	12	8

■ P03 - 1 = COIN MECH 1: NUMBER OF COINS REQUIRED TO REACH BONUS CREDIT LEVEL 1

(Default OFF) (Adjustable OFF – 99)

This sets the number of coins (or Bill Acceptor pulses) that is needed to be inserted into coin mechanism 1 to reach the bonus credit level 1. It can be set to

either OFF for no bonus or 1, 2… to 99 coins, (OFF=No bonus), the *default* setting is "OFF" this mean that the **P03-2** will not open.

■ P03 -2 = COIN MECH 1: NUMBER OF BONUS CREDITS GIVEN AT BONUS LEVEL 1

(Default OFF) (Adjustable OFF – 99)

This sets the number of bonus credits that are given when credit Level 1 is reached. This Bonus amount is the **additional** number of credits required above the **base price**. It can be set to either OFF, 1, 2, 3… to 99 bonus credits; the *default* setting is "OFF" this mean that the **P03-3** will not open.
Note: The **Base Price** is the normal price setting for one game.
e.g. If the game is set for $0.25c/1play then the base price is $0.25c, if the game is set for $0.50c/1play then the base price is $0.50c, if the game is set for $1.00/1play then the base price is $1.00, if the game is set for $2.00/1play then the base price is $2.00

■ P03 – 3= COIN MECH 1: NUMBER OF COINS REQUIRED TO REACH BONUS CREDIT LEVEL 2

(Default OFF) (Adjustable OFF – 99)

This sets the number of coins (or Bill Acceptor pulses) that is needed to be inserted into coin mechanism 1 to reach the bonus credit level 2. It can be set to OFF for no bonus or 1, 2… to 99 coins, but the setting value must be higher than setting value of **P03-1**, the *default* setting is "OFF" and if set to OFF this mean that the **P03-4** will not open.

■ P03 -4 = COIN MECH 1: NUMBER OF BONUS CREDITS GIVEN AT BONUS LEVEL 2

(Default OFF) (Adjustable OFF – 99)

This sets the number of bonus credits that are given when credit Level 2 is reached. This Bonus amount is the **additional** number of credits required above the **base price**. It can be set to either OFF, 1, 2, 3… to 99 bonuses per coin, *default* setting is "OFF"

■ P03 – 5= COIN MECH 1: NUMBER OF COINS REQUIRED TO REACH BONUS CREDIT LEVEL 3

(Default OFF) (Adjustable OFF – 99)

This sets the number of coins (or Bill Acceptor pulses) that is needed to be inserted into coin mechanism 1 to reach the bonus credit level 3. It can be set to OFF for no bonus or 1, 2… to 99 coins, but the setting value must be higher than setting value of **P03-3**, the *default* setting is "OFF" and if set to OFF this mean that the **P03-6** will not open.

■ P03 -6 = COIN MECH 1: NUMBER OF BONUS CREDITS GIVEN AT BONUS LEVEL 3

(Default OFF) (Adjustable OFF – 99)

This sets the number of bonus credits that are given when credit Level 3 is reached. This Bonus amount is the **additional** number of credits required above the **base price**. It can be set to either OFF, 1, 2, 3… to 99 bonuses per coin, *default* setting is "OFF"

■ P04 = COIN MECH 2: NUMBER OF COINS PER CREDIT

(Default 01) (Adjustable 1 – 10)

This sets the number of coins that need to be inserted into coin mechanism 2 for each credit. It can be set to either 1, 2, 3… to 10 coins for one credit. The *default* setting is "1" this means that 1 coin per credit.

■ P05 = COIN MECH 2: NUMBER OF GAME PLAYS PER CREDIT

(Default 01) (Adjustable 1 – 10)

This sets the number of games for each credit inserted into coin mechanism 2. It can be set to either 1, 2, 3… to 10 plays for each credit. The *default* setting is "1" this means that 1 credit per play.

■ P06 = COIN MECH 2: ACTIVATE MULTIPLE BONUS PRICING

(Default OFF) (Adjustable ON – OFF)

Note: Settings P 06 and P 06-1 thru to P06-6 are only used for the setting of bonus pricing levels e.g. $0.50c/1 play, $1/3plays, $2/7plays, $5/20 plays

This turns on the multiple bonus credit system and activates the settings for up to 3 bonus levels on coin mechanism 1. It can be set to ON or OFF. The *default* setting is "OFF" this mean the multiple bonuses is disabled, if the setting changed to ON the multiple bonus setting will be open the next sub-menu **P06-1** and so on.

■ P06 - 1 = COIN MECH 2: NUMBER OF COINS REQUIRED TO REACH BONUS CREDIT LEVEL 1

(Default OFF) (Adjustable OFF – 99)

This sets the number of coins (or Bill Acceptor pulses) that is needed to be inserted into coin mechanism 1 to reach the bonus credit level 1. It can be set to either OFF for no bonus or 1, 2… to 99 coins, (OFF=No bonus), the *default* setting is "OFF" this mean that the **P06-2** will not open.

■ P06 -2 = COIN MECH 2: NUMBER OF BONUS CREDITS GIVEN AT BONUS LEVEL 1

(Default OFF) (Adjustable OFF – 99)

This sets the number of bonus credits that are given when credit Level 1 is reached. This Bonus amount is the **additional** number of credits required above

the **base price**. It can be set to either OFF, 1, 2, 3… to 99 bonus credits; the *default* setting is "OFF" this mean that the **P06-3** will not open.
Note: The **Base Price** is the normal price setting for one game.
e.g. If the game is set for $0.25c/1play then the base price is $0.25c, if the game is set for $0.50c/1play then the base price is $0.50c, if the game is set for $1.00/1play then the base price is $1.00, if the game is set for $2.00/1play then the base price is $2.00

■ P06 – 3= COIN MECH 2: NUMBER OF COINS REQUIRED TO REACH BONUS CREDIT LEVEL 2

(Default OFF) (Adjustable OFF – 99)

This sets the number of coins (or Bill Acceptor pulses) that is needed to be inserted into coin mechanism 1 to reach the bonus credit level 2. It can be set to OFF for no bonus or 1, 2… to 99 coins, but the setting value must be higher than setting value of **P06-1**, the *default* setting is "OFF" and if set to OFF this mean that the **P06-4** will not open.

■ P06 -4 = COIN MECH 2: NUMBER OF BONUS CREDITS GIVEN AT BONUS LEVEL 2

(Default OFF) (Adjustable OFF – 99)

This sets the number of bonus credits that are given when credit Level 2 is reached. This Bonus amount is the **additional** number of credits required above the **base price**. It can be set to either OFF, 1, 2, 3… to 99 bonuses per coin, *default* setting is "OFF"

■ P06 – 5= COIN MECH 2: NUMBER OF COINS REQUIRED TO REACH BONUS CREDIT LEVEL 3

(Default OFF) (Adjustable OFF – 99)

This sets the number of **coins** (or Bill Acceptor pulses) that is needed to be inserted into coin mechanism 1 to reach the bonus credit level 3. It can be set to OFF for no bonus or 1, 2… to 99 coins, but the setting value must be higher than setting value of **P06-3**, the *default* setting is "OFF" and if set to OFF this mean that the **P06-6** will not open.

■ P06 -6 = COIN MECH 2: NUMBER OF BONUS CREDITS GIVEN AT BONUS LEVEL 3

(Default OFF) (Adjustable OFF – 99)

This sets the number of bonus credits that are given when credit Level 3 is reached. This Bonus amount is the **additional** number of credits required above the **base price**. It can be set to either OFF, 1, 2, 3… to 99 bonuses per coin; *default* setting is "OFF"

■ P07 = ATTRACT MODE SOUND

(Default ON) (Adjustable ON or OFF)

This adjustment turns the *attract mode sound* **ON** or **OFF**. This is the sound and music that the game generates to attract customers when it is not being played. The music will cycle approximately every 3 minutes.

■ P08 = AVERAGE TICKETS PER GAME (ATG)

(Default 25) (Adjustable 1 – 50)

This option allows you to set the Average Ticket Per Game (ATG) that you would like the game to pay out. After this ATG setting is done the game sets all the other game settings automatically based on this setting to achieve the correct payout.

SOME COMMON TICKET PAYOUT SETTINGS

*Note: these Average Tickets per Game settings are based on an normal payout of 35-40%

Code (ATG)	10¢ / 10p – Game 1c or 1p Tickets	25¢ / 30p – Game 1c or 1p Tickets	50¢ / 50p - Game 1c or 1p Tickets	75¢/75 – Game 1c or 1p Tickets	US$1 /£1-Game 1c or 1p Tickets
P08	3– 4	10-12	18- 20	26- 30	35-40

■ P09 = NUMBER OF MERCY TICKETS

(Default 1) (Adjustable 0,1,2,3,…,8)

This option allows you to set the Mercy Tickets that are paid out to the player. Mercy tickets are paid out to any player that loses before they reach the Win Level at Level 9 or to any player that loses after the Win Level at Level 9 and doesn't win the Super Bonus.
The default numbers of Mercy tickets are automatically set based on the P-08 ATG setting at 20% of this setting but the number of Mercy Tickets can be adjusted from 0 up to a maximum of 8 or 40% of the ATG.

■ P10 = GAME DIFFICULTY SETTING

(Default 2) (Adjustable 1 – 3)

This option sets the game difficulty level and changing it varies the number of blocks that are in the paying area during the game play. The more blocks there are the easier the game to play. A setting of (1) is the easiest (2) is Medium and (3) the hardest.

■ P11 = ATTRACT MODE ANIMATION (STROBING) DISPLAY

(Default ON) (Adjustable ON or OFF)

These setting controls whether or not the game displays the strobing animation during the games attract mode. When set to ON, the game will display the attract animation with strobing. If set to OFF, the game will skip the strobing part of the attract animation.

■ P12 = TICKETS DISPENSED IN FREE PLAY MODE

(Default OFF) (Adjustable ON or OFF)

This setting controls whether or not the game dispenses tickets in free play mode. The options are **ON** or **OFF**.

■ P13 = COMMON COIN SYSTEM

(Default OFF) (Adjustable ON or OFF)

This setting controls whether a common coin system is active or not, when sets to OFF this means both coin inputs operate separately and different settings can be made for each coin input and both coin inputs act separately. When sets to ON this mean both coin inputs will act like one coin input. This can be used when a DBA (set on 4 pulses per $1) and a 25c coin mech is used.

■ P14 = AUTOMATIC/ MANUAL PAYOUT OF SUPER BONUS TICKETS

(Default for all is ON - automatic) (Adjustable ON or OFF)

The Setting allows the operator to choose whether the Super Bonus tickets are automatically (On) dispensed as normal from the ticket dispenser or Manually (Off) paid by an attendant and cleared manually. If set to Manual the player is prompted to "Please Call Attendant" and the attendant can manually play the player the number of Tickets displayed in the Super Bonus display. To reset the game and clear the Super Bonus display the Attendant needs to push the test button and the Start/Stop button.

■ P15 = FIXED OR INCREMENTING SUPER BONUS TICKETS

(Default for all is ON - Incrementing) (Adjustable ON or OFF)

The setting allows the operator to choose whether the amount of Super Bonus tickets is fixed (Off) or increments (On) higher each game. The starting Super Bonus amount is automatically set at 15 times the P-08 ATG settings, if it is fixed it will stay constantly at this value. If it is set to Increment the Super Bonus ticket amount will increase every game played. The amount that it increments is automatically set based on the P-08 ATG setting

AUDITS MODE

The Audits Mode allows the operator to view statistics in all areas of the Game Play. This enables the operator to make calculated adjustments and "Fine Tune" the machine to maximize earning potential. The Audits mode stores bookkeeping of the games processed since the last game audits reset. While in this mode, the game audits can also be reset to zero, by pressing and holding start button for several seconds.

The Stack It has forty six Audits that can be viewed in this mode. They are A01 to A46 and their codes and values are displayed alternatively during the Audit Mode.

Example: Code **A01** will be displayed as A □ 0 1 and a value of **421** as □ 4 2 1 on the 4-digit display.
Or it will display large values like **21589** as - - - 2 and 1 5 8 9 on the 4-digit display.

AUDITS MODE DIAGRAM

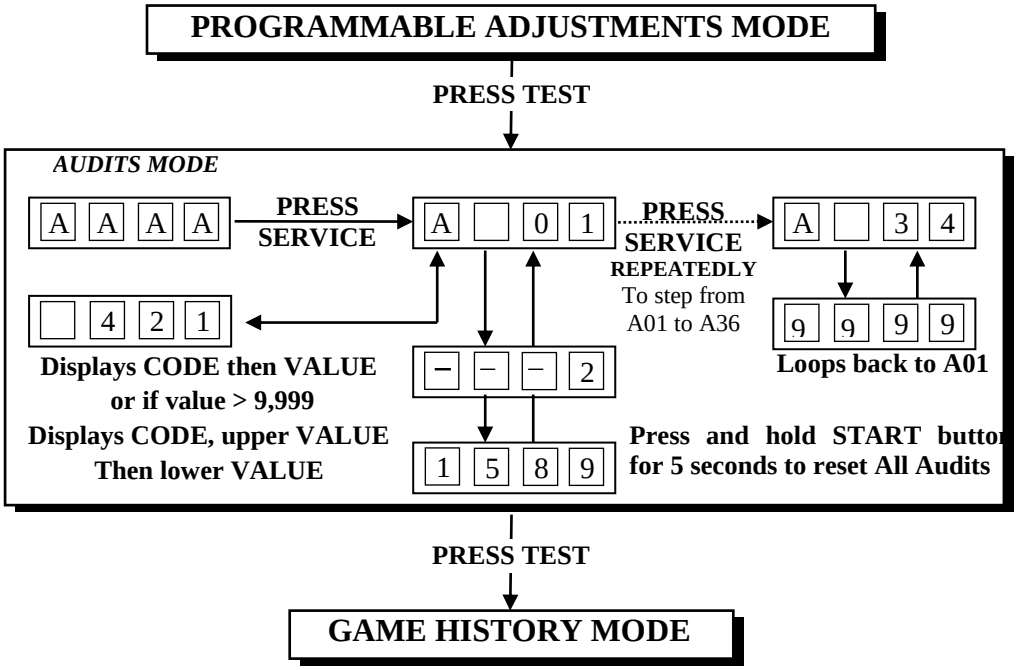

*** NOTE! ***

- For Audit values that are greater than 4 digits the audits' values will be displayed in two steps.
- The first number, which is displayed as - - - 2, has leading dash symbols
- The second value is displayed as 1 5 8 9, which has no dash symbols.
- In this example the final value is 21,589.

AUDIT PROCEDURE

- **ENTER** The Audits mode is entered from Programmable Adjustments mode by pressing the Test button once or from Attract mode by pressing the Test button five times. AAAA Will be displayed on the 4-digit display.

- **SELECT** The green Service button is pressed for advancing each step through the set of audits configurations, starting from the AAAA display, A01 being the first step, continuing through to A47, and then looping again from A01 to A47 until the mode is exited.

- **RESET** The entire set of user audits can be reset during any of the audit configurations, by holding the Start button for longer than 5 seconds. The displays will be cleared while still holding the button pressed and will return to the same audit step after releasing the button. The value of all audits will be reset to "00 000".

- **EXIT** The Audits mode is exited into Game History mode, by pressing the Test button once.

*** NOTE! ***

- **ALL** Audits will **STOP INCREMENTING** when the "Total Number of Games Played", audit A-01, reaches 60,000.

- **To restart the audits they must be reset to 00 000 by holding the Start button for longer than 5 seconds while in audits mode.**

AUDITS QUICK REFERENCE TABLE

CODE	DISPLAY	AUDIT FUNCTION
A01	A-01	Total Played Game (not resetable)
A02	A-02	Total current Played Game (resetable)
A03	A-03	Total Coin Mech. 1
A04	A-04	Total Coin Mech. 2
A05	A-05	Total Service Credits
A06	A-06	Average Ticket / Game
A07	A-07	Average Level / Game
A08	A-08	Total Super bonus wins
A09	A-09	Total Mercy Ticket
A10	A-10	**Total Pay Out on level 9**
A11	A-11	**Total player reach level 12**
A12	A-12	**Total player reach level 11**
A13	A-13	**Total player reach level 10**
A14	A-14	**Total player reach level 9**
A15	A-15	**Total player reach level 8**
A16	A-16	**Total player reach level 7**
A17	A-17	**Total player reach level 6**
A18	A-18	**Total player reach level 5**
A19	A-19	**Total player reach level 4**
A20	A-20	**Total player reach level 3**
A21	A-21	**Total player reach level 2**
A22	A-22	**Total player reach level 1**
A23	A-23	Manufacture Audit (*Total Stack It won*)
A24	A-24	Manufacture Audit (*Total Super Bonus won*)
A25	A-25	*(total game play)* Manufacture Audit
A26	A-26	*(checksum for game audit)* Manufacture Audit
A27	A-27	*(coin 1 counter)* Manufacture Audit
A28	A-28	*(coin 2 counter)* Manufacture Audit
A29	A-29	*(checksum for coin counter)* Manufacture Audit
A30	A-30	(*ticket counter for average calculation*) Manufacture Audit
A31	A-31	(*level counter for average calculation*) Manufacture Audit
A32	A-32	(*total game for average calculation*) Manufacture Audit
A33	A-33	*(checksum* for average calculation *)* Manufacture Audit
A34	A-34	Manufacture Audit (*Main Jackpot counter*)
A35	A-35	Manufacture Audit (*Bonus Jackpot counter*)
A36	A-36	Manufacture Audit (*Checksum for Jackpot counter*)

AUDITS DETAILED

■ A01 = TOTAL GAME PLAYED

This Audit displays the *total number of games played* since the machine was switched on. This is a non reset able audit.

■ A02 = TOTAL PLAYED GAME

This Audit displays the *total number total game played* since the audits were last cleared, this is a reset able audit.

■ A03 = TOTAL COINS IN MECHANISM 1

This Audit displays the *total number of coins* inserted into coin mechanism 1 since the audits were last cleared.

■ A04 = TOTAL COINS IN MECHANISM 2

This Audit displays the *total number of coins* inserted into coin mechanism 2 since the audits were last cleared.

■ A05 = TOTAL NUMBER OF SERVICE CREDITS

This Audit displays the *total number of Service Credits* since the audits were last cleared. This records the number of credits given by pressing the Service Button on the service panel.

■ A06 = AVARAGE TICKET / GAME

This audit displays the *average tickets / game* that has been dispense during the game played since the audits were last cleared.
.

■ A07 = AVARAGE LEVEL / GAME

This audit displays the *average level game* the players has been reach during the game played since the audits were last cleared.
.

■ A08 = TOTAL SUPER BONUS WINS

This audit displays the total of Super Bonus wins since the audits were last cleared.

■ A09 = TOTAL MERCY TICKET GAMES

This audit displays the total player win the Mercy ticket since the audits were last cleared.

- **A10 = TOTAL PAY OUT LEVEL 9**
  This audit displays the *total mercy tickets (Level 9)* dispense since the audits were last cleared.

- **A11 to A22 = TOTAL PLAYER REACH LEVEL 12 to 1**
  This audit displays the total player reach level 12 to level 1 since the audits were last cleared.

- **A23 to A36 = MANUFACTURE AUDITS ONLY**

  These are Manufacturer Audits only and serve no useful function for the operator of this game.

*** NOTE! ***

- **ALL** Audits will **STOP INCREMENTING** when the "Total Number of Games Played", audit A-07, reaches 60,000.

- To restart the audits they must be reset to 00 000 by holding the Start button for longer than 5 seconds while in audits mode.

*** NOTE! ***

- LAI Games Customer Support may request from the operator the values of these Manufacturers audits, to help with any service issues.

GAME HISTORY MODE

By using the Game History Mode the operator can view the results of the last 10 games played. This enables the operator to verify player's game results and verify the win / lose pattern on the LED Playfield Display.

GAME HISTORY MODE DIAGRAM

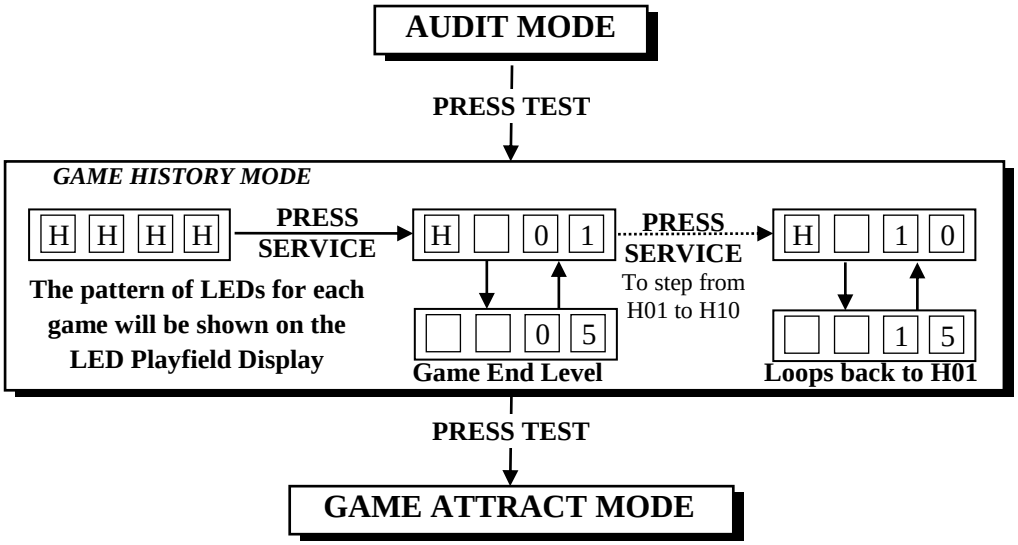

*** NOTE! ***

- Score Histories will be erased if the game is switched off then on. Empty score histories show as - - - - on the 4-digit display

GAME HISTORY QUICK REFERENCE TABLE

CODE	DISPLAY	HISTORY RESULTS
H01	H - 0 1	1st recent number of tickets pay out
H02	H - 0 2	2nd last number of tickets payout
H03	H - 0 3	3rd last number of tickets payout
H04	H - 0 4	4th last number of tickets payout
H05	H - 0 5	5th last number of tickets pay out
H06	H - 0 6	6th last number of tickets pay out
H07	H - 0 7	7th last number of tickets pay out
H08	H - 0 8	8th last number of tickets pay out
H09	H - 0 9	9th last number of tickets pay out
H10	H - 1 0	10th last number of tickets pay out

GAME HISTORY PROCEDURE

- **ENTER** The Game History mode is entered from Audits mode by pressing the Test button once or from Attract mode by pressing the Test button six times. H H H H Will be displayed on the 4-digit display.

- **SELECT** The green Service button is pressed for advancing each step through the set of Game Histories, starting from the H H H H display, H01 being the first step, continuing through to H10, and then looping again from H01 to H10 until the mode is exited.

- **EXIT** The Game History mode is exited into Game Attract mode, by pressing the Test button once.

ERRORS AND TROUBLESHOOTING

If the Game microprocessor detects any problems with the operation of the game, an Error will be displayed on the 4-digit display and the machine will play a voice message. “Please Call the Attendant”. Some error Messages will only be displayed when test mode is entered. Errors are displayed on the displays as Err X, where ‘X’ is the error number. There are eight error messages for Double Up, listed as follows:

ERROR CODE QUICK REFERENCE TABLE

CODE	ERROR DESCRIPTION	SOLUTION
Err1	TICKET ERROR Jammed tickets or no ticket notch pulse for longer than 3 seconds.	Clear ticket dispenser jam, replenish tickets. The push test button once to clear error.
Err2	START/STOP BUTTON JAMMED, active for longer than 30 seconds	Check Button function using switch test
Err3	EEPROM ERROR Problem with on-board EEPROM	The main MCU is getting errors reading the EEPROM (24C16 IC on MCU).

TROUBLESHOOTING GAME ERRORS

■ CLEARING GAME ERRORS

Game errors can be cleared, by pushing the test button ONCE. The game will try and check if the error is fixed. If the reason for the error is fixed, the game will continue as normal. If the error is not fixed, the error will remain on the display.

■ Err1 – TICKET ERROR

This error usually occurs if the game has run out of tickets or there is a ticket jam when the machine tries to dispense tickets. A less common reason is if the game PCB tries to dispense tickets but doesn't get a notch pulse for approximately three seconds.

Use the Switch Test and test the notch pulse by manually activating the micro-switch on the ticket/capsule dispenser, an active notch will be display as **C1**.
If the game was out of tickets, replace the tickets, clear the jam and then push the test button once to clear the error. The game will then payout any owed tickets.

■ Err2 – START/STOP BUTTON JAMMED

This error is usually displayed if the Start/Stop button is active for longer than 30 seconds. Use the Switch Test and check the Stop/Start button, an active button will be displayed as **C3**.

■ Err3 – EEPROM ERROR

This Error is only displayed in test mode and means that the CPU cannot read the EEPROM, or is receiving errors during communication with the EEPROM (The 24C16 IC on the main MCU PCB). This could cause problems with the game audits and program settings. The first thing to do is trying to switch ON and OFF the machine in at least 2 cycles, if message still appear than replace the EEPROM IC Atmel 24C16 on the CPU PCB with the new EEPROM, If still Error massage, this could be a problems with the game audits and program. If this error occurs, send your main MCU PCB to the nearest authorized LAI games dealer for repair.

SECTION A: SERVICE INSTRUCTIONS

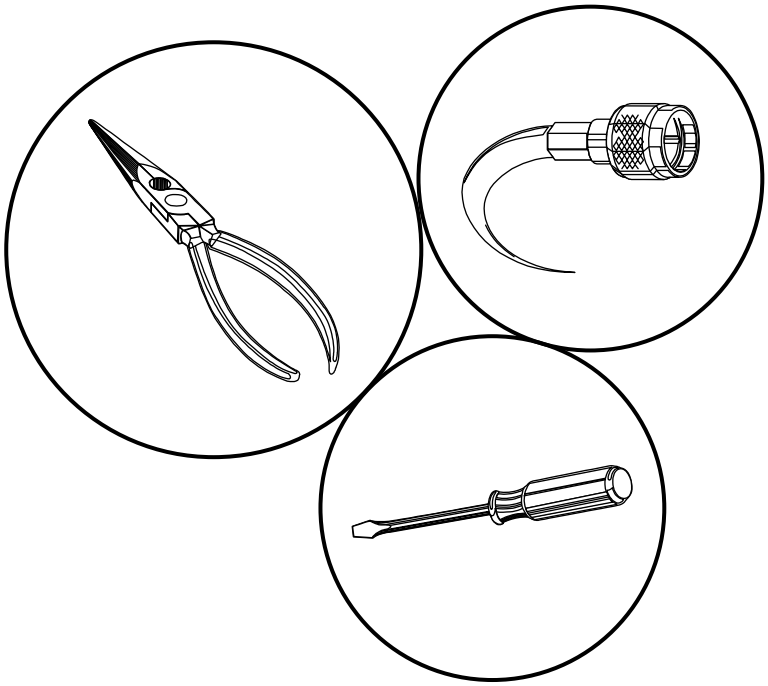

BE SURE TO READ THE FOLLOWING
Carefully before servicing this machine

A

LOCATING AND ACCESSING PARTS

BAFB45A 4 digit 4” display

BAFB96B GNT Display Red/Yellow

Ticket value (BAFB144 Ticket display PCB)

BAFB96 GNT Display Blue

BAFB51 4 Digit Display

Rectangular Green Button

EA0523 Large Red Mega Button

PARTS LOCATION DIAGRAM Cont.

As viewed from rear

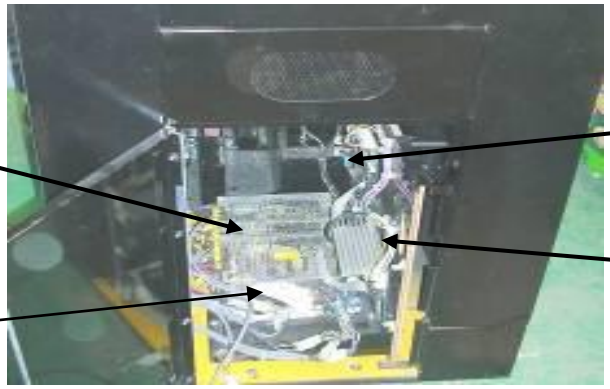

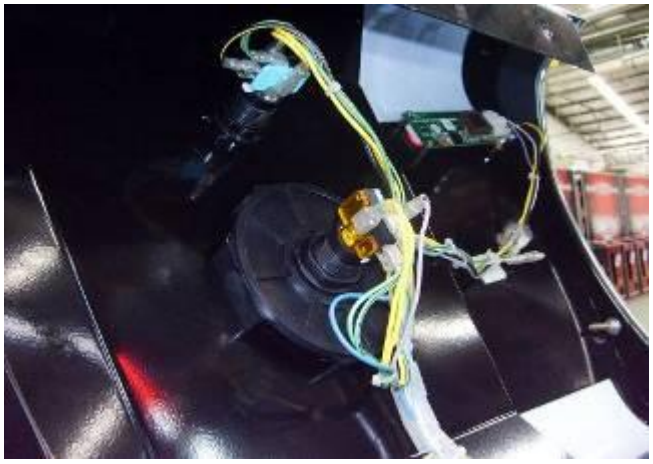

Control Panel Open to gain Access to Buttons and Speakers

PARTS DESCRIPTION

■ COIN MECHANISMS

The coin mechanisms can be accessed from the front door of the machine cabinet.

■ CASH BOX

The cash box can be accessed from the front door of the machine cabinet.

■ SPEAKERS

Two speakers are located right under control panel and can be accessed from the front of the machine through coin door.

■ SERVICE CONTROLS:

Can be found on, the service panel mounted on top of the cash box and accessed through the front door of the machine cabinet.

SERVICE BUTTON: Used to input credits to the game without activating the coin counter, and to perform adjustment procedures in combination with the test button.

TEST BUTTON: Used to perform the adjustment mode, in combination with the Service button.

UP BUTTON: Used to increase values in the adjustment mode, in combination with the Service & Test buttons.

DOWN BUTTON: Used to decrease values in the adjustment mode, in combination with the Service & Test buttons.

VOLUME KNOB: Used to adjust the speaker's sound level.

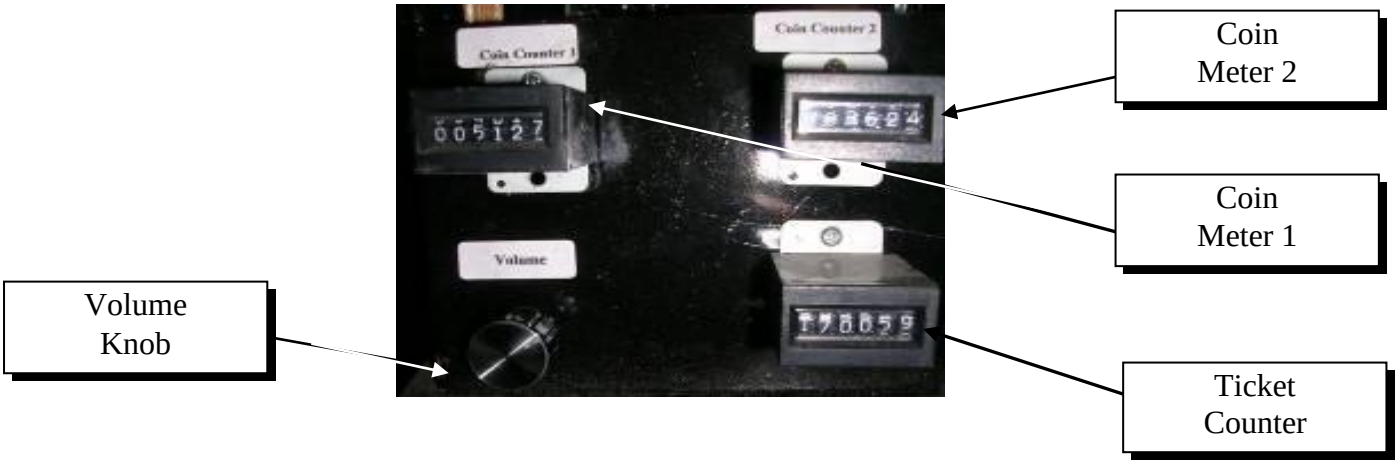

Control Button on Coin Door

GAME CONTROLS:

Located on the control panel in the center of the machine cabinet. The control panel can be accessed by removing the two bolts from inside the control panel and lift the control panel to gain access from top.

■ POWER CORD

The power cord is a standard IEC power cord (as used on computers) that is plugged in to the power inlet socket at the rear of the machine. The power cord can be removed for transport.

■ POWER INLET

The power inlet is located at the rear of the machine on the Left-hand side as viewed from the rear. It is a standard IEC inlet socket.

■ MAINS SWITCH

The mains switch is located on the power inlet assembly along with the mains fuse, and IEC inlet socket.

■ FUSES

For locations of all fuses refer to Fuses and Fuse location, of this manual.

*** WARNING! ***

Always *turn* ***OFF*** *Mains power and unplugged the game, before replacing any fuses*

Always *use the correct rated fuse. Refer to page for fuse information.*

■ PCB's

For location of all game PCB's, refer to the Parts Location diagram page of this manual.

■ POWER SUPPLY

The power supply is located at the back of the cabinet and is accessed from the rear of the machine. It is a multi voltage switching power supply.

LAMPS

*** WARNING! ***

Always *turn* ***OFF*** *Mains power and unplugged the game, before replacing any lamps.*

Always *allow time for cooling as Lamps that have been active for a time may still be too hot to touch.*

■ COIN DOOR LAMPS

The coin door lamps all are 12V/DC GE194 or equivalent and can be accessed through the front door.

■ BUTTON LAMPS

The button lamps are 12V/DC GE194 or equivalent and can be accessed through the front door.

■ CONTROL PANEL LAMPS

The control panel lamps all are 12V/DC GE906 or equivalent and can be accessed through the front door.

*** CAUTION! ***

Always *replace the lamps with the same or equivalent size, wattage and voltage.*

MAINTENANCE

CLEANING AND CHECK UP

■ EXTERIOR

Regularly dust and clean the external cabinet areas as required, using a soft water-damp cloth and mild soap. Check for blown bulbs and replace as required.

Any scratches or marks in the fiberglass or acrylic can be buffed out using car polish or cut and polish.

*** CAUTION! ***

Do not *use solvents on the panels as it may affect the artwork.*

■ INTERIOR

Regularly dust and vacuum the interior of the cabinet, taking care to remove any objects that may have fallen on the PCBs. Check and tighten all fixing hardware and fasteners as required.

*** WARNING! ***

Always *turn* ***OFF*** *Mains power and unplugged the game, before cleaning the interior of the machine.*

Always *after cleaning the cabinet interior, check all harness connectors and restore all loose or interrupted connections.*

SECTION B: TECHNICAL DETAILS

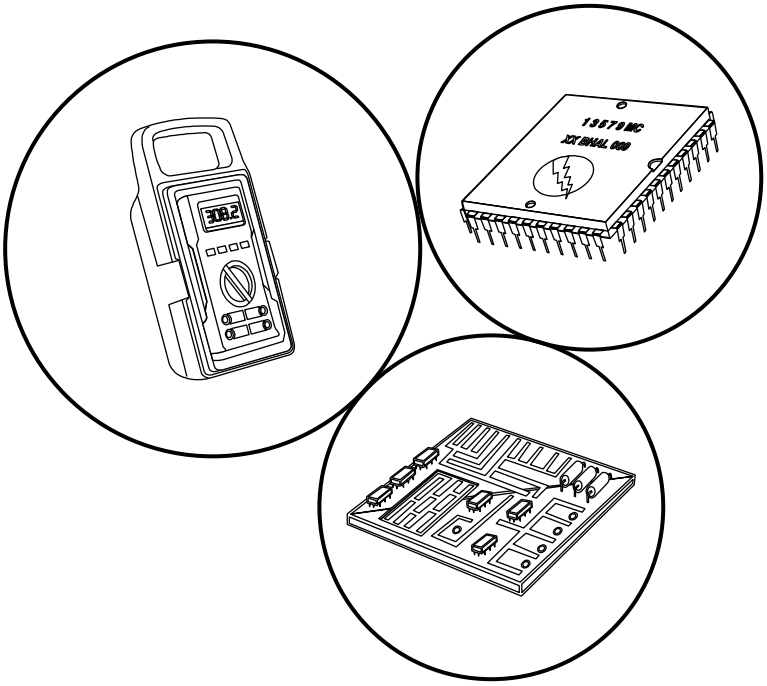

It is advised that anybody using SECTION B for repairing or modifying any of the components of the game should be a qualified technician, having at least a basic knowledge of digital components, integrated circuits and electricity.

B

MAINS VOLTAGE ADJUSTMENT

■ POWER SUPPLY

The Switch Mode Power Supply has a switch to set the mains voltage range. It is located at the rear of the game cabinet, and is accessed via the back door. Use a thin blade screwdriver to move the selector switch to the desired mains voltage (See Diagram Below)

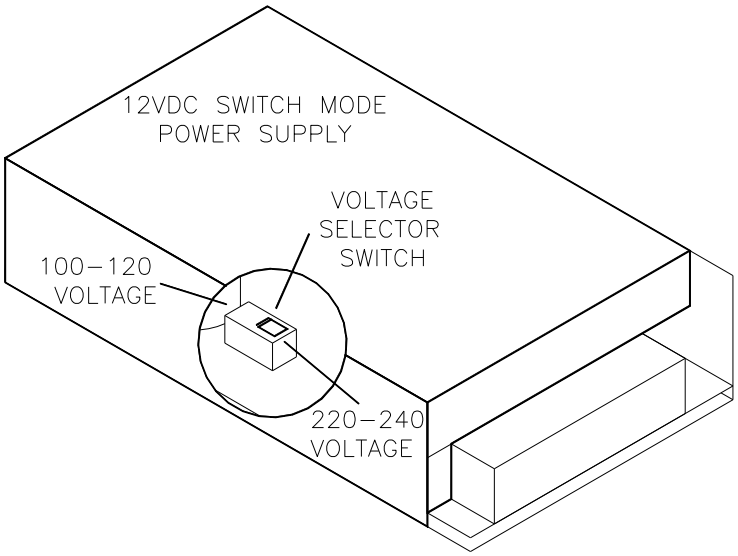

■ FLORESCENT TUBE BALLASTS AND STARTERS

Locate the florescent tube ballasts and starters in the back of the cabinet. If unsure of the location of any ballasts or starters, refer to Parts Shown on the picture below. These have to be removed and replaced with an equivalent wattage at your local mains voltage level.

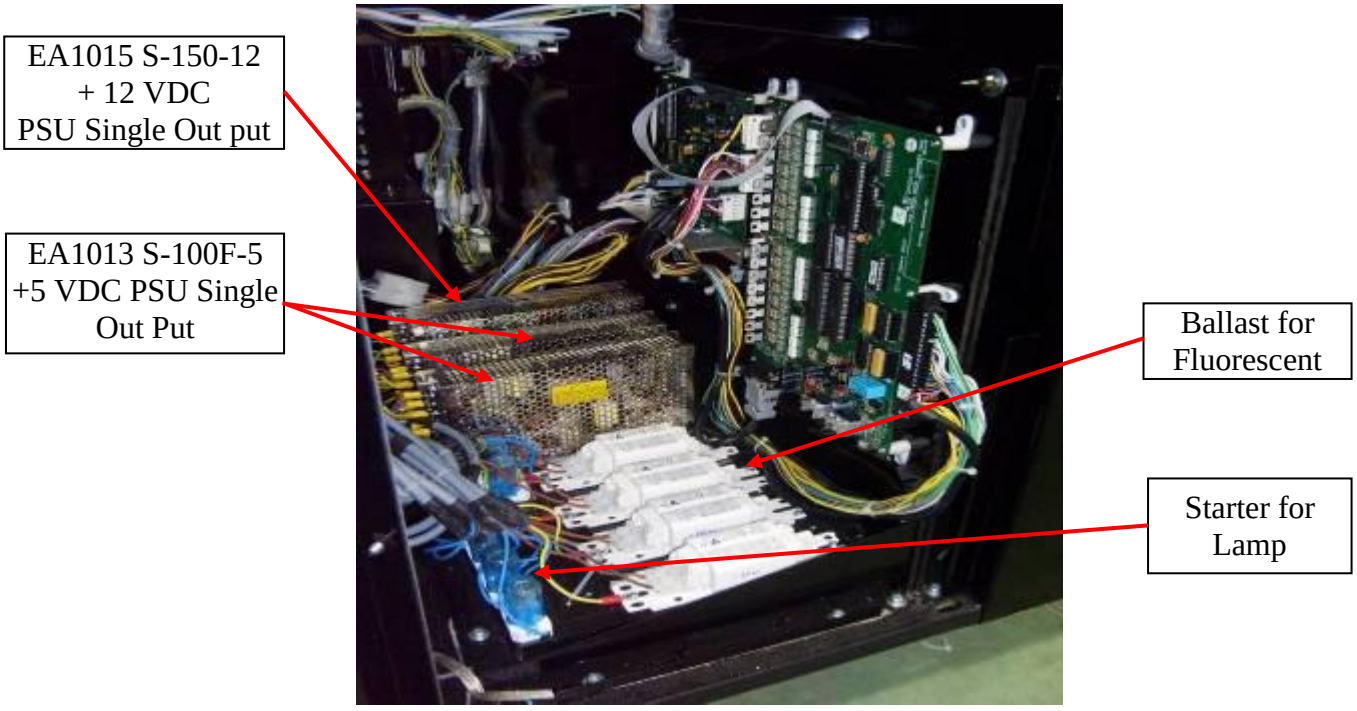

TICKET DISPENSER REFERENCE GUIDE

"Quick Release" Ticket Dispenser Manual

U.S. Patent 5833104
Additional Patents Pending

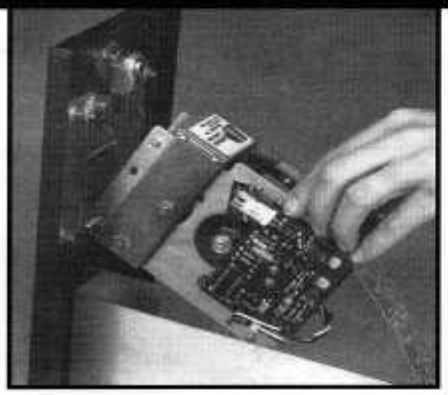

The "Quick Release" Ticket Dispenser

- Quick release face plate
- Bottom metal ticket guide
- Foolproof braking system
- Optical sensor dust cover

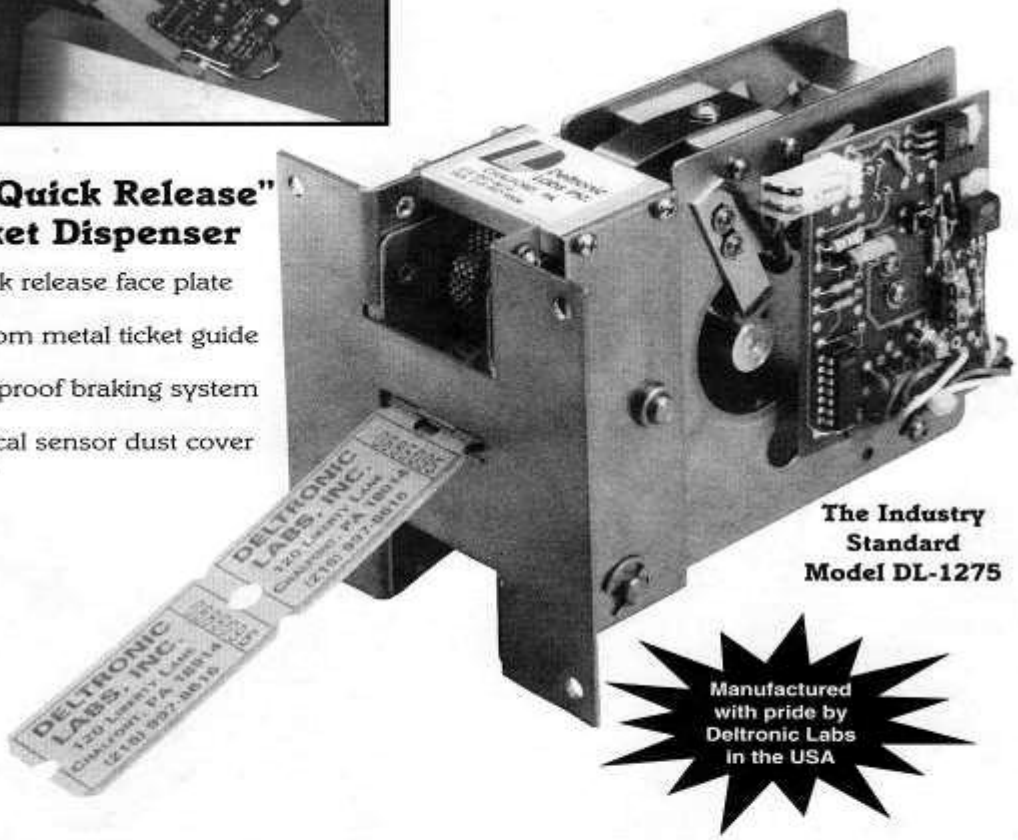

The Industry Standard Model DL-1275

Manufactured with pride by Deltronic Labs in the USA

Another quality product from Deltronic Labs . . . the industry leader in ticket dispensers.

Deltronic Labs, Inc. 120 Liberty Lane, Chalfont, PA 18914
215-997-8616 • FAX# 215-997-9506 • Web Site: www.deltroniclabs.com

"Quick Release" Ticket Dispenser Features

All Models

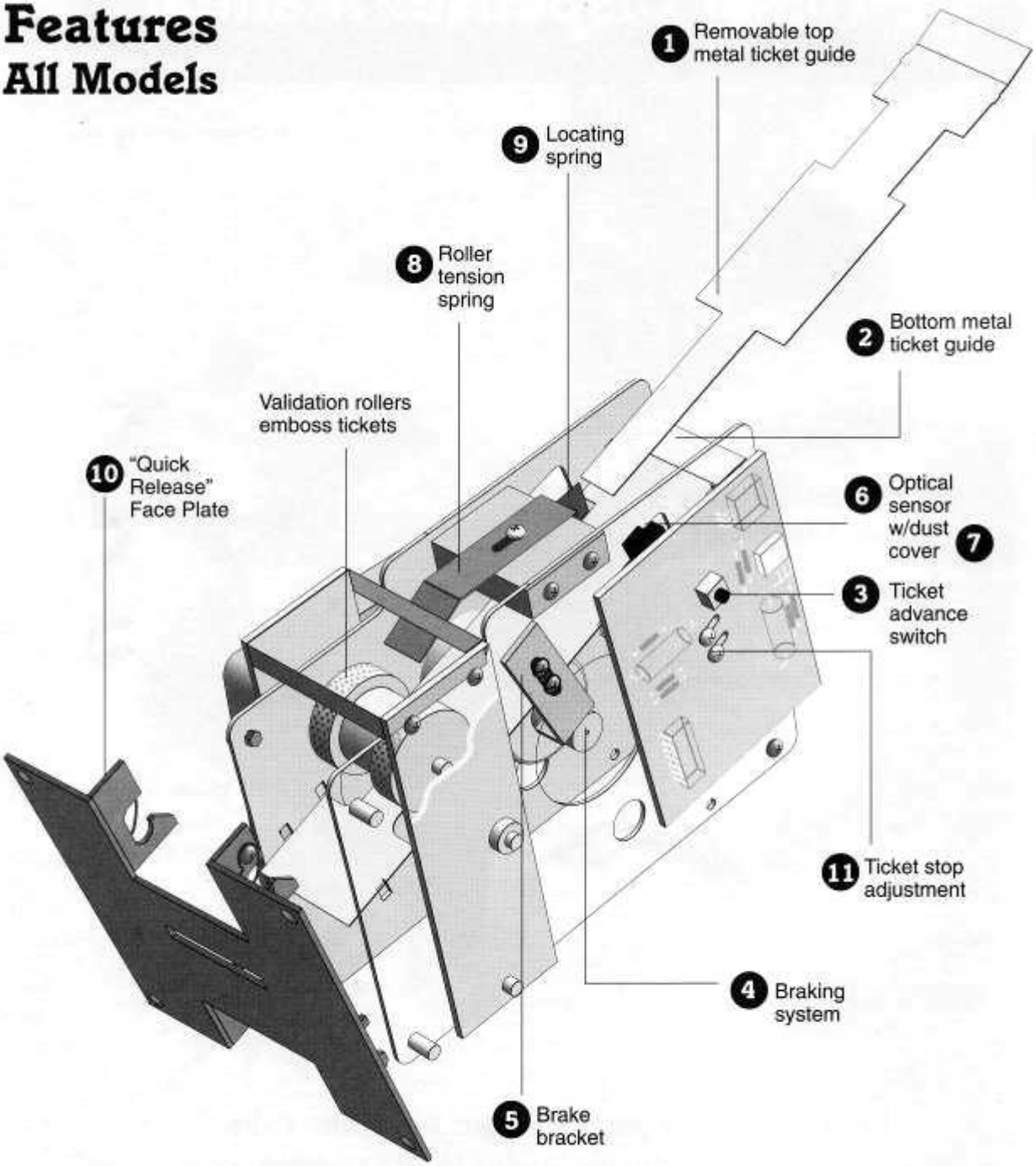

Deltronic Labs, Inc. 120 Liberty Lane, Chalfont, PA 18914 • 215-997-8616 • FAX# 215-997-9506 • www.deltroniclabs.com

Ticket Dispenser Assembly

Details of Parts

F/N	Qty	Deltronic Labs P/N	Name
11	1	SHFT-IDLRLR/TD/	IDL. ROLLER SHAFT
12	1	RM-SFTMTR/TD/	MOTOR PIVOT SHAFT
13	1	SPAC PIVBLK/TD/4HOL	PIVOT BRACKET SPAC
14	1	RM-SPCPB/TD/	SPACER BLOCK
15	2	RM-RLRIDL/TD/VALD	IDLER ROLLER
16	1	RM-RLRDRV/TD/VALD	DRIVE ROLLER
17	2	SPRG-TENSN/TD/	TENSION SPRING
18	2	RM-BKTPVT/TD	MTR PIVOT BKT.
19	1	RM-PANLFT/TD/NOPM	FRONT PANEL
20	1	RM-WHLBRK/TD/	BRAKE WHEEL
21	1	SPRG-LOCAT/TD/	LOCATING SPRING
22	1	RM-BKTBRK/TD/	BRAKE BRACKET
23	1	RM-BKTTUB/TD/3/8	URETHANE BRAKE
24	1	PCBD-1275/TD/ *	PC BOARD
25	1	RM MOTOR/TD/	MOTOR
26	2	RM-PLATFR/TD	FRAME PLATE
27	1	RM-CONN2P/TE/20G	2-PIN FEMALE CONN.
28	4	BRNG-F312/TT/BRASS	BUSHING
29	1	SPAC-PCBD/TD/	P.C. BOARD SPACER
30	1	SPAC/HEX/TD/1-1/4	HEX SPACER 1-1/4"
31	1	RM .1M/TT/50V	.1MFD 50V
32	1	SPAC-HEX/TD/1/4"	STAND OFF
33	1	GUID-BOTTOM/TD/MET	LOWER GUIDE MET.
34	4	RING-E25RT/TT/	RETAINING RING
35	1	GUID-TOP/TD/MET	TOP GUIDE METAL
36	2	PULY-SP212/TE/NYLN **	SPACER WASHER
37	2	SPRG FRONTP/TD/	SPRING FRONT-PLATE
38	4	RM-PEMNUT/TD/FRPL	PEMNUT FRAME
39	2	RM-PEMNUT/TD/FRPN	PEMNUT FRONT
40	1	COVR-H21A/TD/OPTO	DUST COVER
41	1	CONN MOLEX/TD/4PM	4 WIRE MOLEX MA.
42	1	RM-LABEL/TD/ALUM.	LABEL ALUMINUM
43		WIRE-RED/BLK/TD/MOTOR	
44	2	SPAC-PIVBRK/TD/HEX***	SPACER 1/4" HEX.

* Order by Model #

** Note: F/N #36 replaces .032 and .093 spacer washers.

*** Note: F/N #44 replaces large spacer block.

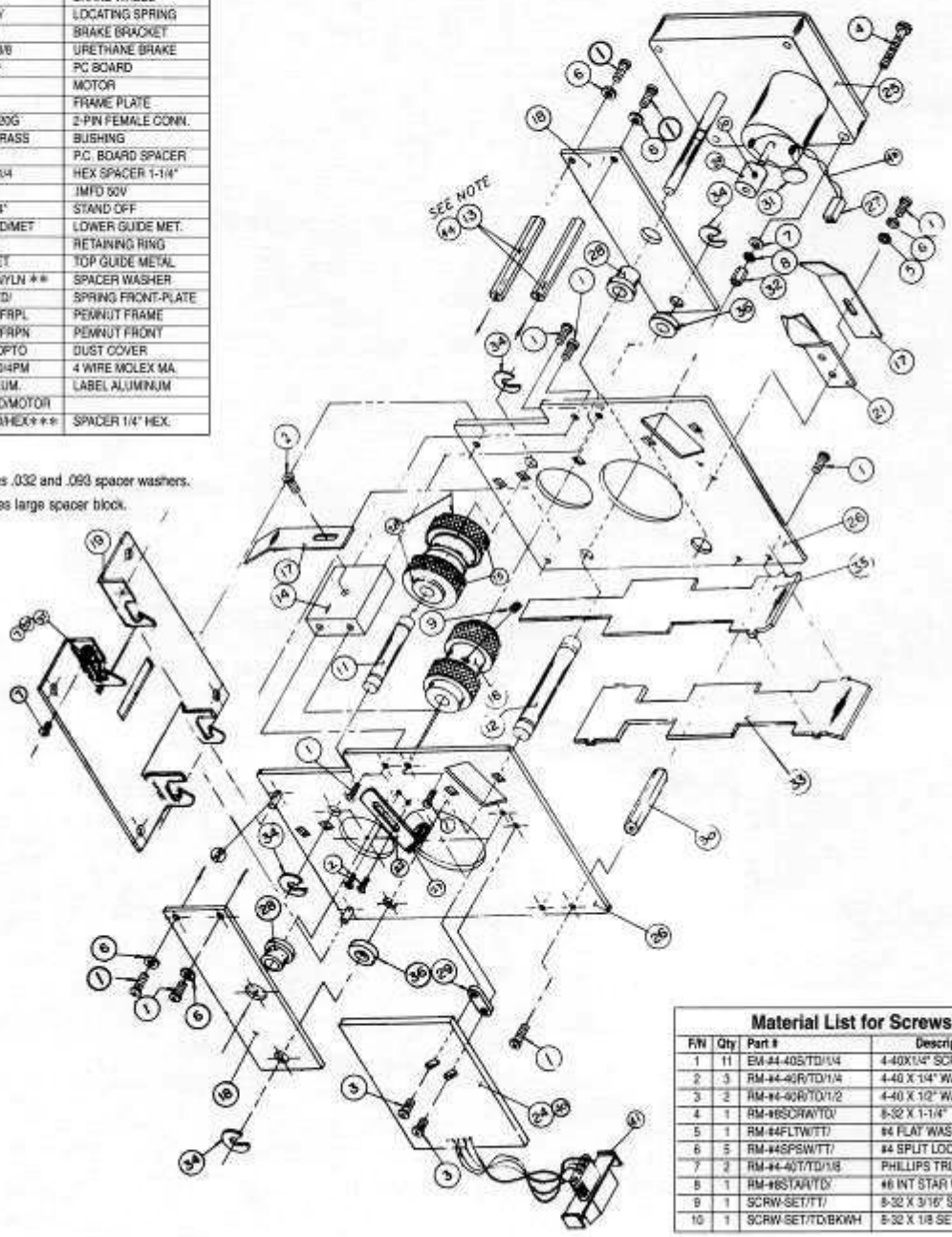

Material List for Screws

F/N	Qty	Part #	Description
1	11	EM-#4-40S/TD/1/4	4-40X1/4" SCREW
2	3	RM-#4-40R/TD/1/4	4-40 X 1/4" WASHER HEAD
3	2	RM-#4-40R/TD/1/2	4-40 X 1/2" WASHER HEAD
4	1	RM-#8SCRW/TD/	8-32 X 1-1/4"
5	1	RM-#4FLTW/TT/	#4 FLAT WASHER
6	5	RM-#4SPSW/TT/	#4 SPLIT LOC. WASHER
7	2	RM-#4-40T/TD/1/8	PHILLIPS TRUSSHEAD
8	1	RM-#6STAR/TD/	#6 INT STAR WASHER
9	1	SCRW-SET/TT/	8-32 X 3/16" SET SCREW
10	1	SCRW-SET/TD/BKWH	8-32 X 1/8 SET SCREW

Deltronic Labs, Inc. 120 Liberty Lane, Chalfont, PA 18914 • 215-997-8616 • FAX# 215-997-9506 • www.deltroniclabs.com

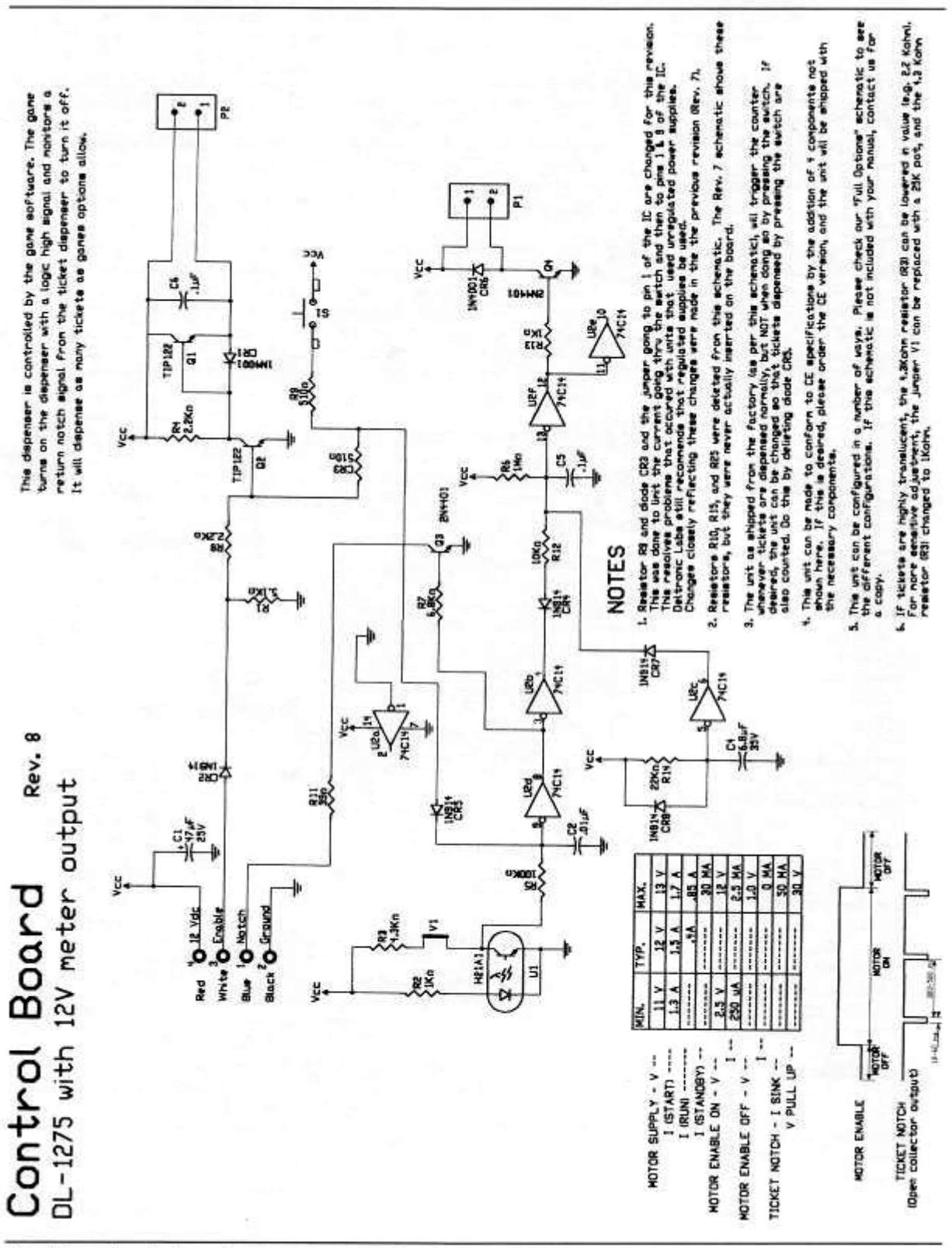
Control Board
DL-1275 with 12V meter output
Rev. 8
This dispenser is controlled by the game software. The game turns on the dispenser with a logic high signal and monitors a return notch signal from the ticket dispenser to turn it off. It will dispense as many tickets as games options allow.
NOTES
1. Resistor R9 and diode CR3 and the jumper going to pin 1 of the IC are changed for this revision. This was done to limit the current going thru the switch and then to pins 1 & 9 of the IC. This resolves problems that occurred with units that used unregulated power supplies. Deltronic Labs still recommends that regulated supplies be used. Changes closely reflecting these changes were made in the previous revision (Rev. 7).
2. Resistors R10, R15, and R25 were deleted from the schematic. The Rev. 7 schematic shows these resistors, but they were never actually inserted on the board.
3. The unit as shipped from the factory (as per this schematic) will trigger the counter whenever tickets are dispensed normally, but NOT when dong so by pressing the switch. If desired, the unit can be changed so that tickets dispensed by pressing the switch are also counted. Do this by deleting diode CR5.
4. This unit can be made to conform to CE specifications by the addition of 4 components not shown here. If this is desired, please order the CE version, and the unit will be shipped with the necessary components.
5. This unit can be configured in a number of ways. Please check our "Full Options" schematic to see the different configurations. If this schematic is not included with your manual, contact us for a copy.
6. If tickets are highly translucent, the 1.3Kohm resistor (R3) can be lowered in value (e.g. 2.2 Kohm). For more sensitive adjustment, the jumper V1 can be replaced with a 25K pot, and the 1.2 Kohm resistor (R2) changed to 1Kohm.
MIN. TYP. MAX.
MOTOR SUPPLY - V -- 11 V 12 V 13 V
I (START) ---- 1.3 A 1.5 A 1.7 A
I (RUN) ------- ------ .4A .85 A
I (STANDBY) -- ------ ------ ------ 30 MA
MOTOR ENABLE ON - V -- 2.5 V ------ 12 V
I -- 230 uA ------ 2.5 MA
MOTOR ENABLE OFF - V -- ------ ------ 1.0 V
I -- ------ ------ 0 MA
TICKET NOTCH - I SINK -- ------ ------ 50 MA
V PULL UP -- ------ ------ 30 V
MOTOR ENABLE
TICKET NOTCH
(Open collector output)
MOTOR OFF
MOTOR ON
MOTOR OFF
Red 12 Vdc
White Enable
Blue Notch
Black Ground
P1
P2
Vcc

Control Board

Models DL-4-S-S DL-4-P-S

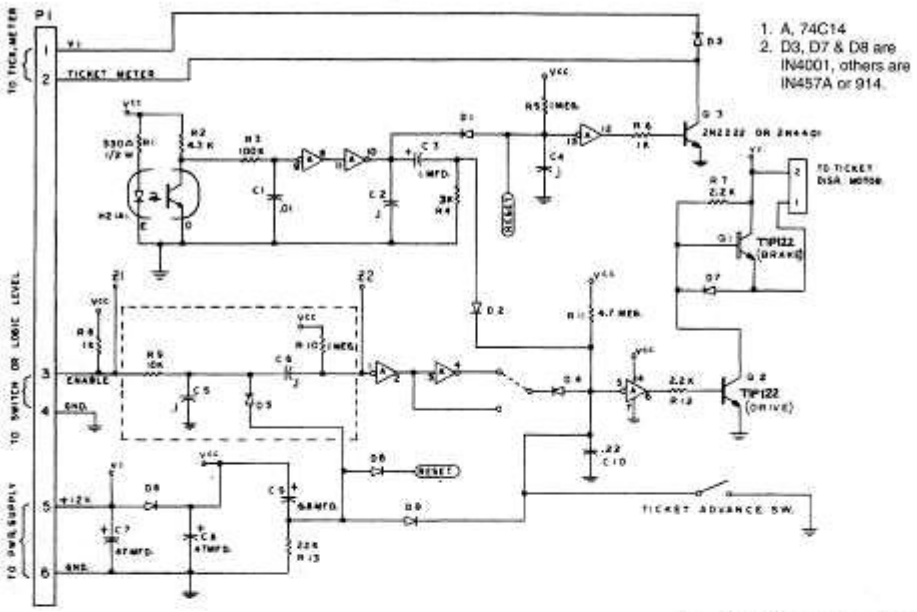

1. A, 74C14
2. D3, D7 & D8 are IN4001, others are IN457A or 914.

Model #DL-4-S-S, SW Input
Model #DL-4-P-S, Logic Input.

Note: With logic input components and dotted lines are omitted and Z1 is jumpered to Z2.

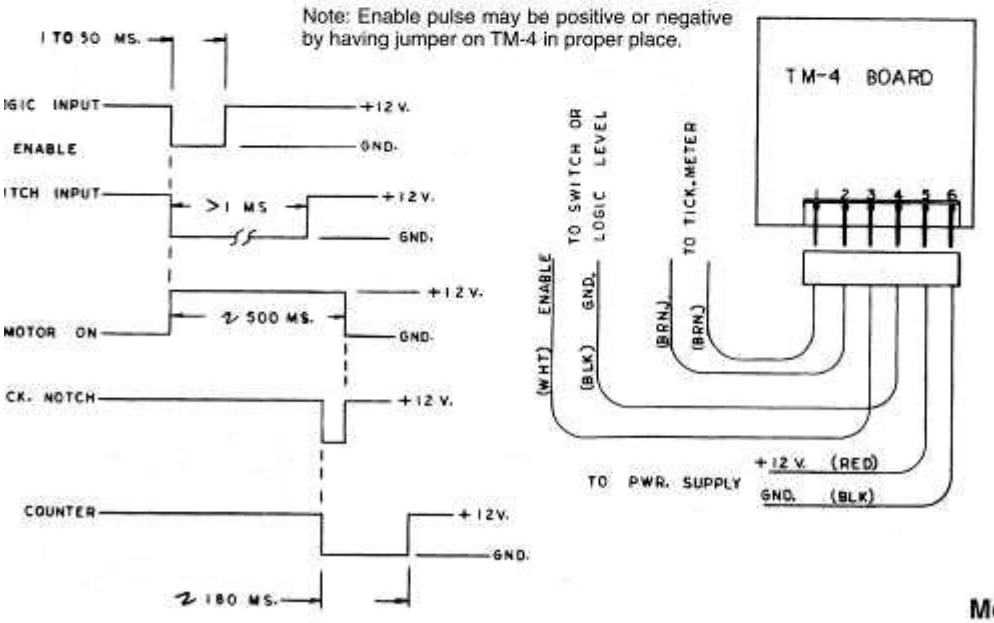

Note: On PCB TM-4, Rev. 1 & 2, Q1 and Q2 transistors are D40K1or equivalent.

Model #DL-4-S-S
Model #DL-4-P-S

Deltronic Labs, Inc. 120 Liberty Lane, Chalfont, PA 18914 • 215-997-8616 • FAX# 215-997-9506 • www.deltroniclabs.com

STACK IT MAIN WIRING

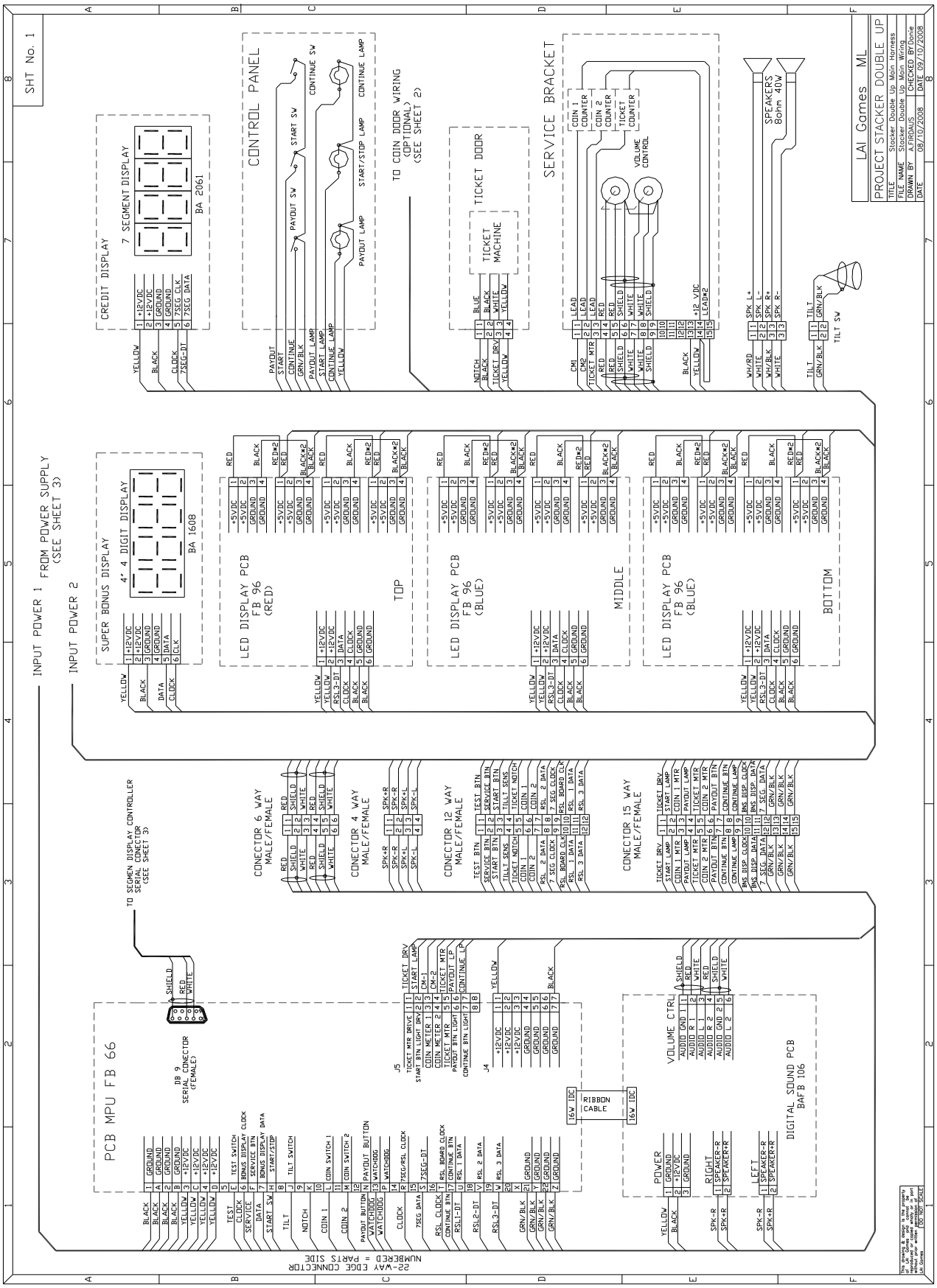

STACK IT TICKET DISPLAY WIRING

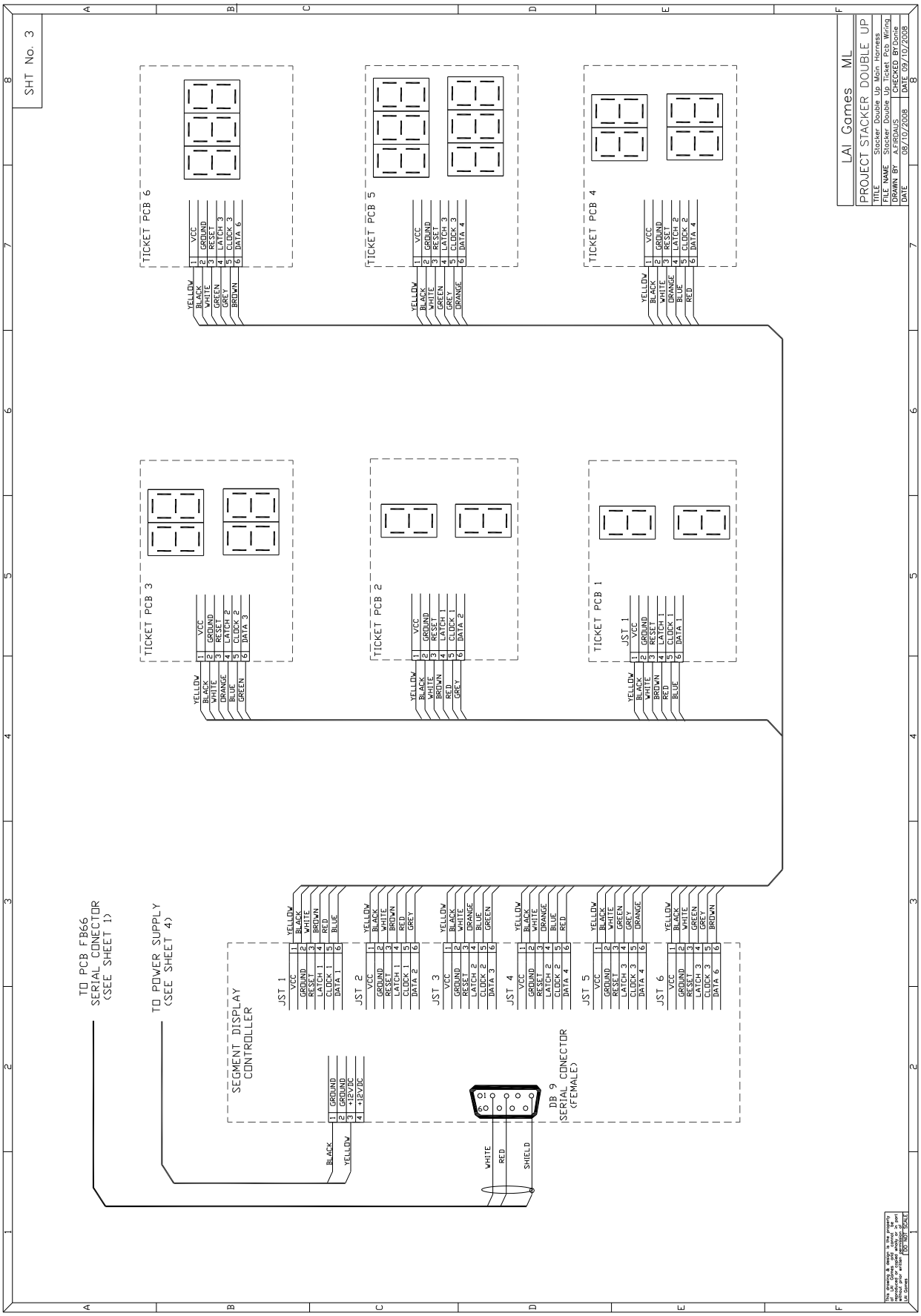

STACK IT COIN WIRING

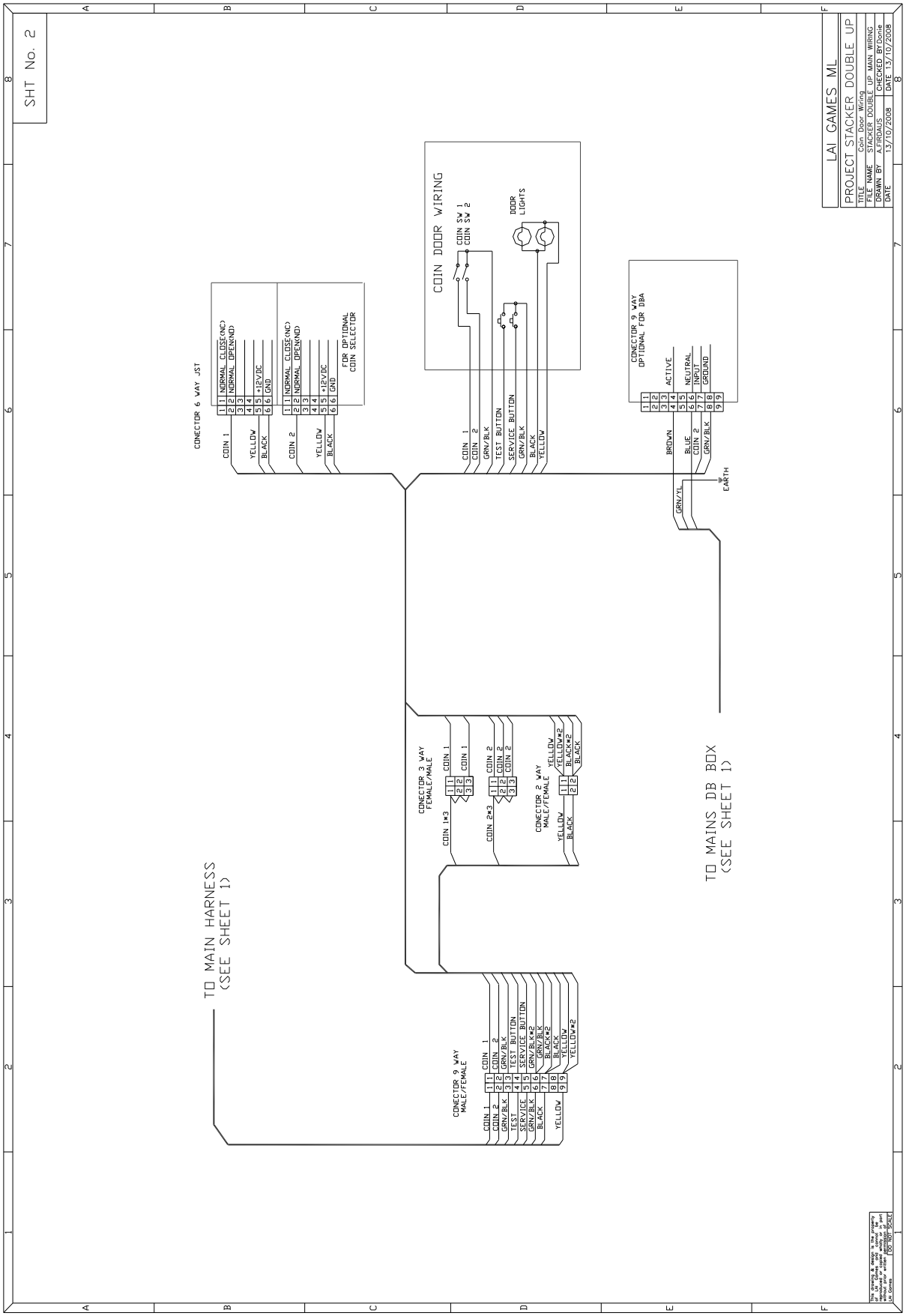

STACK IT POWER WIRING

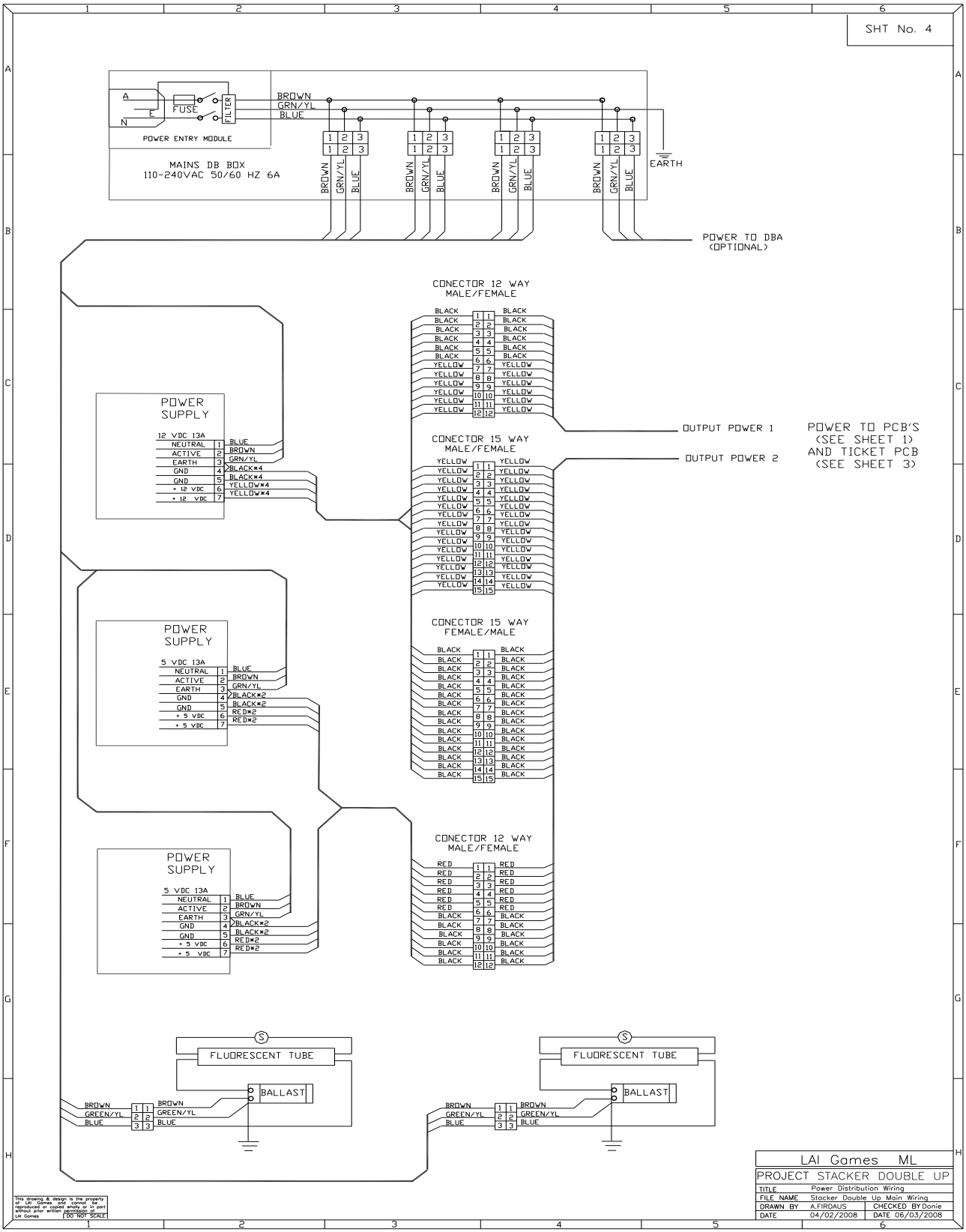

DISCLAIMER

OPERATOR WILL TAKE NOTE.

BY ACCEPTING DELIVERY OF AND PLACING THIS HARDWARE AND LICENSED SOFTWARE INTO OPERATION, OPERATOR REPRESENTS AND WARRANTS THAT IT WILL ONLY OPERATE THE HARDWARE AND LICENSED SOFTWARE PROVIDED BY LAI GAMES IN COMPLIANCE WITH THE REGULATORY REQUIREMENTS OF THE COUNTRY, STATE, AND/OR MUNICIPALITY IN WHICH THE HARDWARE AND LICENSED SOFTWARE ARE USED AND/OR OPERATED. LAI GAMES HAS PROVIDED THIS HARDWARE AND LICENSED THE SOFTWARE ***ONLY*** FOR LEGITIMATE AND LEGAL USE, AND ANY USE OF THE HARDWARE AND LICENSED SOFTWARE IN A MANNER THAT VIOLATES ANY LAWS OF THE COUNTRY, STATE, AND/OR MUNICIPALITY IN WHICH THE HARDWARE AND LICENSED SOFTWARE ARE USED AND/OR OPERATED IS WHOLLY UNAUTHORIZED AND SHALL BE AT OPERATOR'S SOLE AND COMPLETE RISK.

Operator assumes any and all risk and liability for any civil or criminal legal claims or causes of action arising from the unauthorized use and/or operation of the provided hardware and licensed software, such improper and unauthorized use specifically including, but not limited to:

(a) Operating or allowing the operation of the hardware and licensed software in a manner that violates the laws and regulations of the country, state, and/or municipality in which the hardware and licensed software are used or operated;

(b) Assembling or causing the assembly of the hardware in a manner not authorized by or disclosed in this manual;

(c) Any tampering with, changes to, or modifications of the licensed software that occur after the software leaves LAI GAMES' factory that is not made by authorized LAI GAMES personnel and that is directly or indirectly caused by Operator; and

(d) Any tampering with the computer chip/electronic programmable read only memory (EPROM) by or on behalf of Operator that directly or indirectly causes the tamper-indicating holographic seal on the computer chip/EPROM to be broken or damaged in any way.

LAI GAMES shall have no liability related to such improper and unauthorized use and/or operation of the hardware and licensed software, and Operator shall indemnify, defend, and hold LAI GAMES harmless for any claim or cause of action brought against LAI GAMES arising from Operator's or Operator's representative's improper and unauthorized use and/or operation of the hardware and licensed software.

ANY IMPROPER AND UNAUTHORIZED USE SHALL COMPLETELY AND TOTALLY VOID ANY AND ALL WARRANTIES, BOTH EXPRESS AND IMPLIED, OF THE HARDWARE AND LICENSED SOFTWARE PROVIDED BY LAI GAMES.

WARRANTY

LAI GAMES warrants its manufactured products for a period of 3 months inclusive of parts and labor from the date of sale.

LAI GAMES exclusive obligation is to repair any item with any defects as a result of faulty workmanship or materials, providing the defective item or items of equipment are returned to the *LAI GAMES* distributor from which the machine was purchased.

LAI GAMES shall have no obligation to make repairs necessitated by negligence or interference to any component by any unauthorized personal. This will automatically void any existing warranty.

IF MAKING A WARRANTY CLAIM:

(a) A Copy of the sales invoice must accompany the claim.
(b) To and from Transport and freight costs are not covered by the warranty.
(c) Warranty is not transferable with the sale of a machine from one owner to another.

LAI GAMES

sales@laigames.com www.laigames.com

INTERNATIONAL SALES & SERVICE

Sales/Enquiries: sales@laigames.com
Tech. Support: support@mleisure.co.id
Website: www.laigames.com

ISO 9001 CERTIFIED ORGANIZATION

URS

UKAS QUALITY MANAGEMENT 043-A

ISO 9001: 2008 Cert No.17460